FPS T series

50 Hz Submersible Turbine Pumps

5", 6", 7", 8" and 10"

Franklin Electric

Table of Contents

Application 2
Features 2
Materials of Construction 2
Performance Summary 3

Order/Performance Information:

FPS-520T 4
FPS-625T 6
FPS-635T 8
FPS-645T 10
FPS-655T 12
FPS-680T 14
FPS-690T 16
FPS-7100T 18
FPS-7155T 20
FPS-8110T 22
FPS-8130T 24
FPS-8190T 26
FPS-8220T 28
FPS-10200T 30
FPS-10250T 32
FPS-10300T 24

FPS T series

5", 6", 7", 8" and 10"
Submersible Turbine Pumps, 50 Hz

Application:

- Agriculture
- Industrial
- Mining
- Municipal water supply
- Pressure boosting
- River water extraction

Features:

- Rugged cast iron mixed-flow turbine pumps for high-flow applications. (Bronze impeller construction optional).
- Stainless steel shaft, coupling, and fasteners.
- Built-in spring-loaded check valve.
- Enhanced-flow motor adaptor design protects motor seal, spline, and coupling from high velocity abrasives.

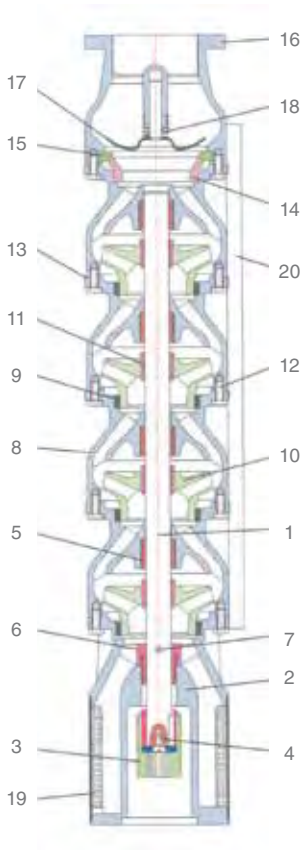

Materials of Construction

	Part Name	Common Material Name	Material Spec Number
1	Shaft	Stainless Steel	AISI 420
2	Motor Bracket	Cast Iron	GG25
3	Coupling	Stainless Steel	AISI 420
4	Coupling Screw	Stainless Steel	AISI 304
5	Bearing	Rubber/Steel	
6	Sand Guard	Stainless Steel	AISI 420
7	Sand Guard Screw	Stainless Steel	AISI 304
8	Diffuser	Cast Iron	GG25
9	Wear Ring	Rubber/Steel	
10	Impeller	Cast Iron	GG25
11	Bushing	Stainless Steel	AISI 420
12	Screw	Stainless Steel	AISI 304
13	Gasket	Silicon Paper	
14	Valve Ring	Steel	
15	Valve Seat	Rubber	
16	Discharge Assembly	Cast Iron	GG25
17	Check Valve	Cast Iron	GG25
18	Check Valve Spring	Stainless Steel	AISI 304
19	Intake Screen	Stainless Steel	AISI 304
20	Cable Guard	Stainless Steel	AISI 304

Bronze (LG2) impeller construction available by special order.

T-Series Performance

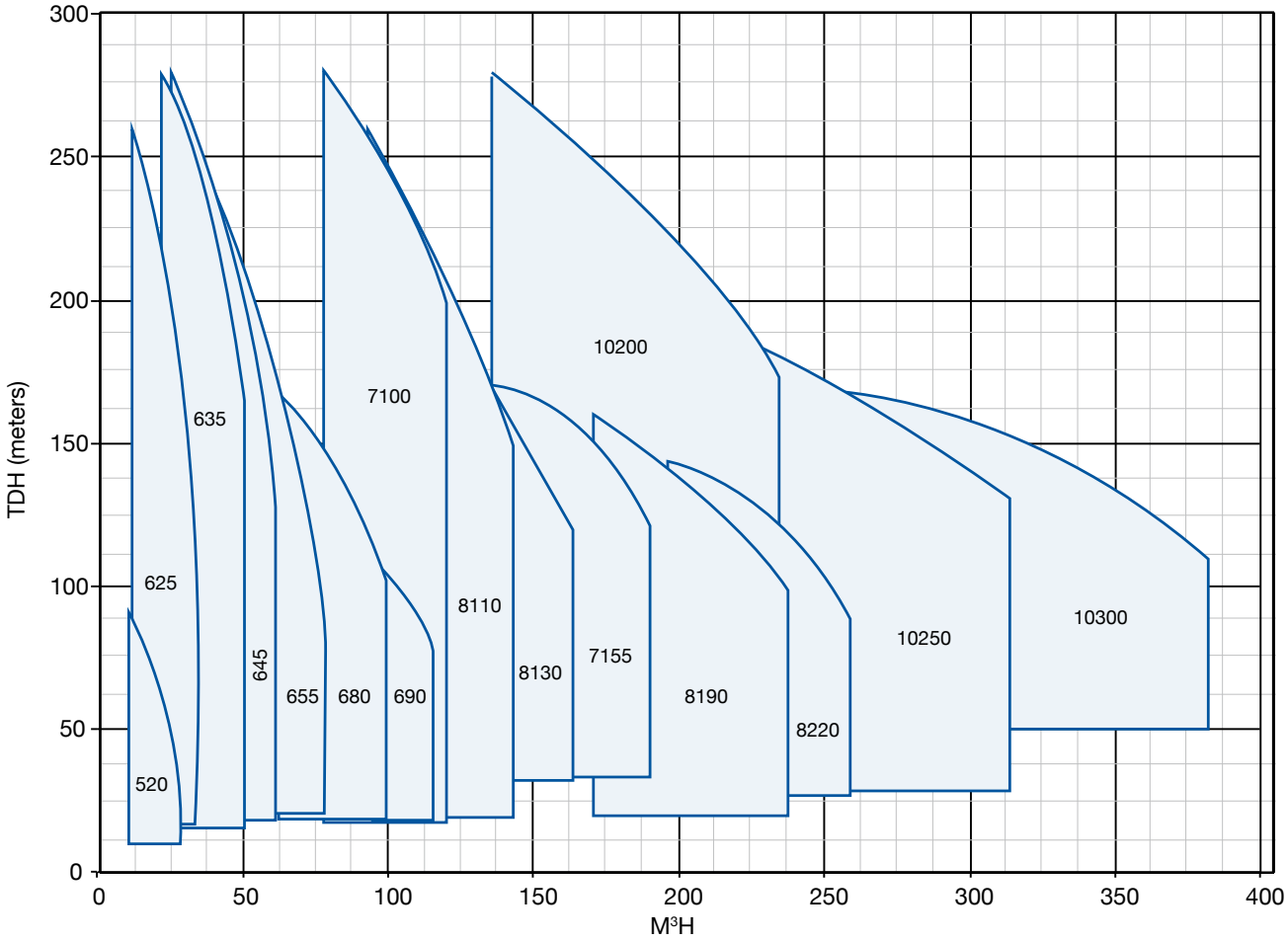

Specifications:

- Impeller type: semi-axial
- Liquid to be pumped: Chemically and mechanically non-aggressive
- Allowable water temperature: 0-40 °C
- Max working pressure: 25 atm
- Max submergence: 250 m
- Allowable solids: 50 g/m³ , 2mm max
- Construction and safety standards:

TS 111146:1993
TS EN 809:2000
98/37/EC
TS EN ISO 12100-1:2007
TS EN ISO 12100-1:2006

FPS-520T Ordering Information

Dimension Information

m3/h	kW	HP	# of Stages	Motor Size	Order No..	Model Description	Weight (kg)
20	1.5	2	3	4	985050204003	20T5C3-50401.5	16
	2.2	3	4	4	985050204004	20T5C4-50402.2	19
	2.2	3	5	4	985050204005	20T5C5-50402.2	22
	2.2	3	6	4	985050204006	20T5C6-50402.2	26
	3.7	5	7	4	985050204007	20T5C7-50403.7	29
	3.7	5	8	4	985050204008	20T5C8-50403.7	32
	3.7	5	9	4	985050204009	20T5C9-50403.7	36
	5.5	7.5	10	4	985050204010	20T5C10-50405.5	39
	5.5	7.5	11	4	985050204011	20T5C11-50405.5	42
	5.5	7.5	12	4	985050204012	20T5C12-50405.5	46
	5.5	7.5	13	4	985050204013	20T5C13-50405.5	49
	5.5	7.5	14	4	985050204014	20T5C14-50405.5	52
	7.5	10	15	4	985050204015	20T5C15-50407.5	56
	7.5	10	16	4	985050204016	20T5C16-50407.5	59
	7.5	10	17	4	985050204017	20T5C17-50407.5	62
	7.5	10	18	4	985050204018	20T5C18-50407.5	66
	7.5	10	19	4	985050204019	20T5C19-50407.5	69
	11	15	20	4	985050204020	20T5C20-504011	72

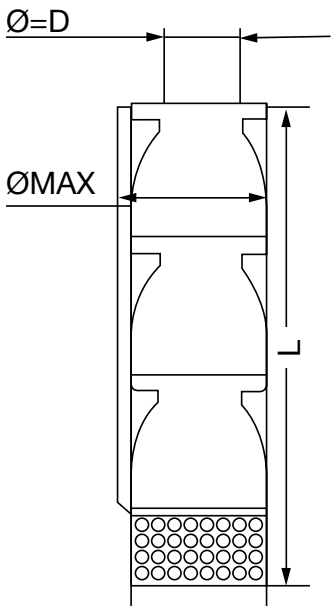

Model Description	Length (mm) - L	Discharge (in) - D	Max Ø (mm)
20T5C3-50401.5	640	3"	120
20T5C4-50402.2	750	3"	120
20T5C5-50402.2	860	3"	120
20T5C6-50402.2	970	3"	120
20T5C7-50403.7	1080	3"	120
20T5C8-50403.7	1190	3"	120
20T5C9-50403.7	1300	3"	120
20T5C10-50405.5	1410	3"	120
20T5C11-50405.5	1520	3"	120
20T5C12-50405.5	1630	3"	120
20T5C13-50405.5	1740	3"	120
20T5C14-50405.5	1850	3"	120
20T5C15-50407.5	1960	3"	120
20T5C16-50407.5	2070	3"	120
20T5C17-50407.5	2180	3"	120
20T5C18-50407.5	2290	3"	123
20T5C19-50407.5	2400	3"	123
20T5C20-504011	2510	3"	123

Note: 1* Diameter (ØMax) includes cable guard.
2* Discharge is threaded, 8 TPI, BSPP.

FPS-520T Performance Curve

50 Hz
2900 RPM

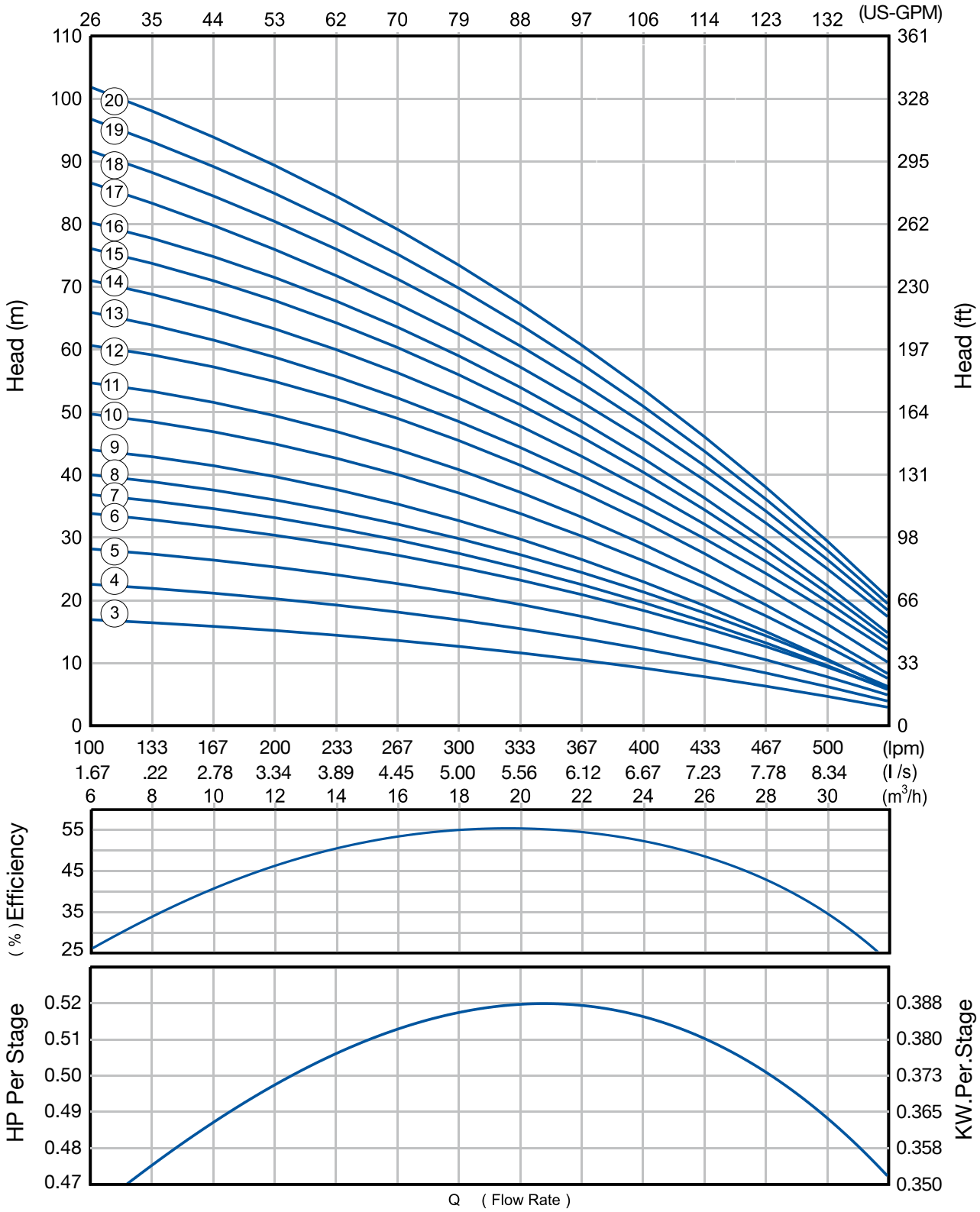

1* Tolerance of curves according to EN 9906 Appendix A

2* The hydraulic working characteristics have been calculated with water at 15°C at the atmospherical pressure of 1 bar

3* Performance curves are based on the kinematic viscosity ν = 1mm^2/s and density ρ = 1000 kg / m^3

FPS T series

FPS-625T Ordering Information

Dimension Information

m3/h	kW	HP	# of Stages	Motor Size	Order No.	Model Description	Weight (kg)
25	3.7	5	3	6	985060256003	25T6C3-50603.7	33
	5.5	7.5	4	6	985060256004	25T6C4-50605.5	39
	5.5	7.5	5	6	985060256005	25T6C5-50605.5	46
	7.5	10	6	6	985060256006	25T6C6-50607.5	52
	7.5	10	7	6	985060256007	25T6C7-50607.5	59
	9.3	12.5	8	6	985060256008	25T6C8-50609.3	65
	9.3	12.5	9	6	985060256009	25T6C9-50609.3	72
	11	15	10	6	985060256010	25T6C10-506011	78
	15	20	11	6	985060256011	25T6C11-506015	85
	15	20	12	6	985060256012	25T6C12-506015	91
	15	20	13	6	985060256013	25T6C13-506015	98
	15	20	14	6	985060256014	25T6C14-506015	104
	18.5	25	15	6	985060256015	25T6C15-506018.5	111
	18.5	25	16	6	985060256016	25T6C16-506018.5	117
	18.5	25	17	6	985060256017	25T6C17-506018.5	124
	18.5	25	18	6	985060256018	25T6C18-506018.5	130
	22	30	19	6	985060256019	25T6C19-506022	136
	22	30	20	6	985060256020	25T6C20-506022	143
	22	30	21	6	985060256021	25T6C21-506022	149
	22	30	22	6	985060256022	25T6C22-506022	156

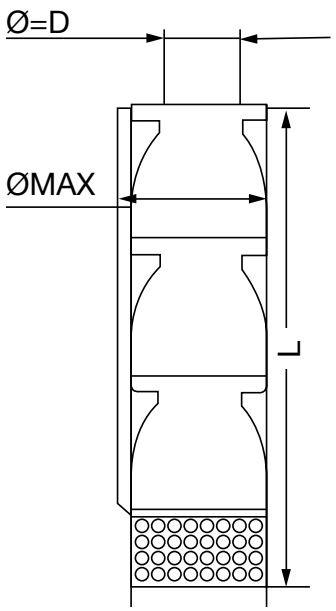

Model Description	Length (mm) - L	Discharge (in) - D	Max Ø (mm)
25T6C3-50603.7	710	3"	153
25T6C4-50605.5	830	3"	153
25T6C5-50605.5	950	3"	153
25T6C6-50607.5	1070	3"	153
25T6C7-50607.5	1190	3"	153
25T6C8-50609.3	1310	3"	153
25T6C9-50609.3	1430	3"	153
25T6C10-506011	1550	3"	153
25T6C11-506015	1670	3"	153
25T6C12-506015	1790	3"	153
25T6C13-506015	1910	3"	153
25T6C14-506015	2030	3"	153
25T6C15-506018.5	2150	3"	153
25T6C16-506018.5	2270	3"	153
25T6C17-506018.5	2390	3"	153
25T6C18-506018.5	2510	3"	153
25T6C19-506022	2630	3"	153
25T6C20-506022	2750	3"	153
25T6C21-506022	2870	3"	153
25T6C22-506022	2990	3"	153

Note: 1* Diameter (ØMax) includes cable guard.
2* Discharge is threaded, 8 TPI, BSPP.

FPS-625T Performance Curve

50 Hz
2900 RPM

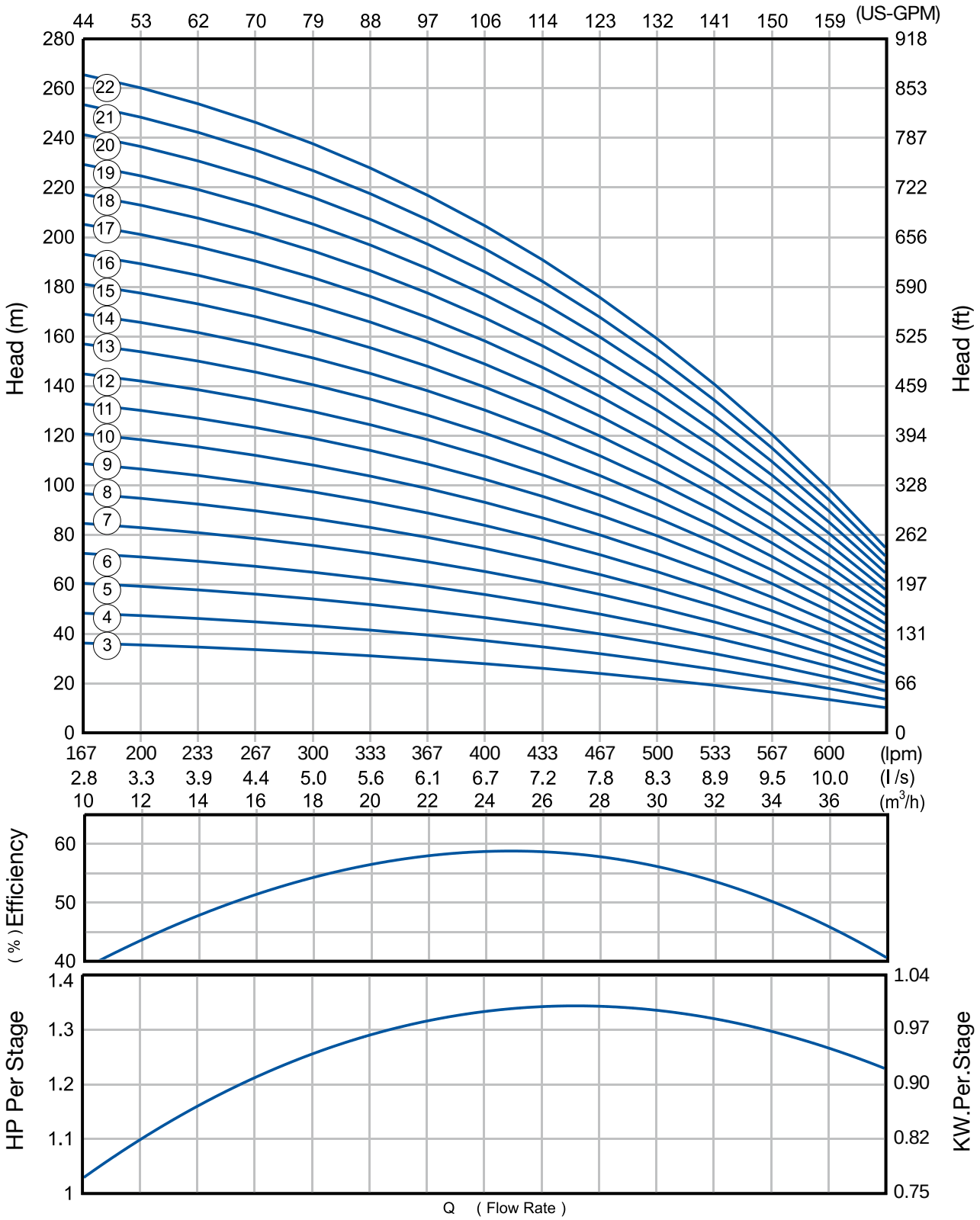

1* Tolerance of curves according to EN 9906 Appendix A

2* The hydraulic working characteristics have been calculated with water at 15°C at the atmospherical pressure of 1 bar

3* Performance curves are based on the kinematic viscosity ν = 1mm^2/s and density ρ = 1000 kg / m^3

FPS T series

FPS-635T Ordering Information

Dimension Information

m3/h	kW	HP	# of Stages	Motor Size	Order No.	Model Description	Weight (kg)
35	3.7	5	2	6	985060356002	35T6C2-50603.7	25
	5.5	7.5	3	6	985060356003	35T6C3-50605.5	31
	7.5	10	4	6	985060356004	35T6C4-50607.5	37
	7.5	10	5	6	985060356005	35T6C5-50607.5	43
	9.3	12.5	6	6	985060356006	35T6C6-50609.3	49
	11	15	7	6	985060356007	35T6C7-506011	55
	15	20	8	6	985060356008	35T6C8-506015	61
	15	20	9	6	985060356009	35T6C9-506015	67
	15	20	10	6	985060356010	35T6C10-506015	73
	18.5	25	11	6	985060356011	35T6C11-506018.5	79
	18.5	25	12	6	985060356012	35T6C12-506018.5	85
	22	30	13	6	985060356013	35T6C13-506022	91
	22	30	14	6	985060356014	35T6C14-506022	97
	22	30	15	6	985060356015	35T6C15-506022	103
	26	35	16	6	985060356016	35T6C16-506026	109
	26	35	17	6	985060356017	35T6C17-506026	115
	30	40	18	6	985060356018	35T6C18-506030	121
	30	40	19	6	985060356019	35T6C19-506030	127
	30	40	20	6	985060356020	35T6C20-506030	133
	37	50	21	6	985060356021	35T6C21-506037	139
	37	50	22	6	985060356022	35T6C22-506037	145

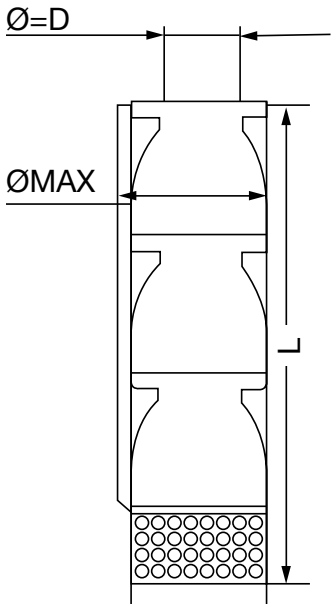

Model Description	Length (mm) - L	Discharge (in) - D	Max Ø (mm)
35T6C2-50603.7	615	3"	153
35T6C3-50605.5	730	3"	153
35T6C4-50607.5	845	3"	153
35T6C5-50607.5	960	3"	153
35T6C6-50609.3	1075	3"	153
35T6C7-506011	1190	3"	153
35T6C8-506015	1305	3"	153
35T6C9-506015	1420	3"	153
35T6C10-506015	1535	3"	153
35T6C11-506018.5	1650	3"	153
35T6C12-506018.5	1765	3"	153
35T6C13-506022	1880	3"	153
35T6C14-506022	1995	3"	153
35T6C15-506022	2110	3"	153
35T6C16-506026	2225	3"	153
35T6C17-506026	2340	3"	153
35T6C18-506030	2455	3"	153
35T6C19-506030	2570	3"	153
35T6C20-506030	2685	3"	153
35T6C21-506037	2800	3"	153
35T6C22-506037	2915	3"	153

Note: 1* Diameter (ØMax) includes cable guard.
2* Discharge is threaded, 8 TPI, BSPP.

FPS-635T Performance Curve

50 Hz
2900 RPM

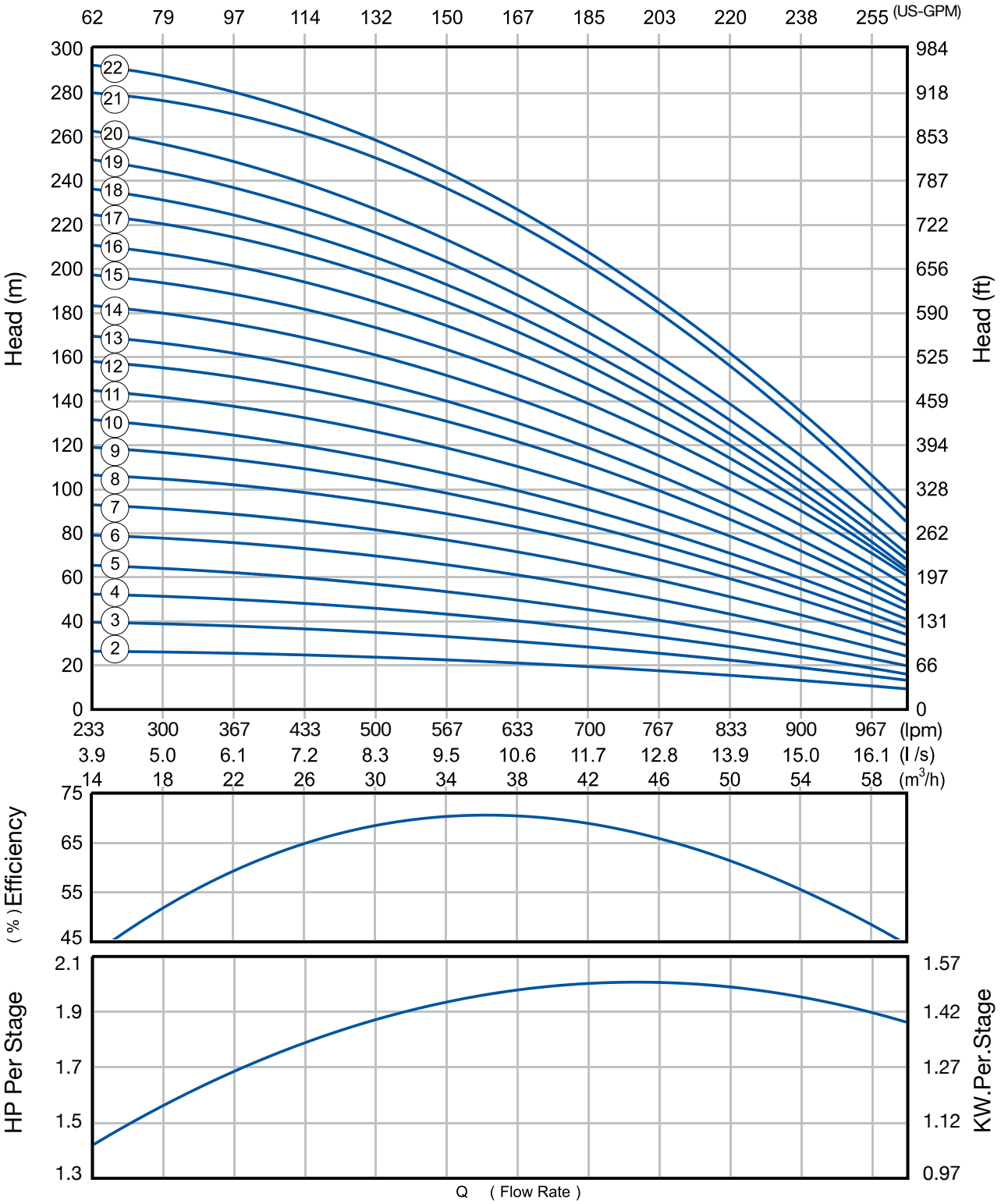

1* Tolerance of curves according to EN 9906 Appendix A

2* The hydraulic working characteristics have been calculated with water at 15°C at the atmospherical pressure of 1 bar

3* Performance curves are based on the kinematic viscosity ν = 1mm^2/s and density ρ = 1000 kg / m^3

FPS T series

FPS-645T Ordering Information

Dimension Information

m3/h	kW	HP	# of Stages	Motor Size	Order No.	Model Description	Weight (kg)
45	3.7	5	2	6	985060456002	45T6C2-50603.7	25
	5.5	7.5	3	6	985060456003	45T6C3-50605.5	31
	7.5	10	4	6	985060456004	45T6C4-50607.5	37
	9.3	12.5	5	6	985060456005	45T6C5-50609.3	43
	11	15	6	6	985060456006	45T6C6-506011	49
	15	20	7	6	985060456007	45T6C7-506015	55
	15	20	8	6	985060456008	45T6C8-506015	61
	18.5	25	9	6	985060456009	45T6C9-506018.5	67
	18.5	25	10	6	985060456010	45T6C10-506018.5	73
	22	30	11	6	985060456011	45T6C11-506022	79
	22	30	12	6	985060456012	45T6C12-506022	85
	26	35	13	6	985060456013	45T6C13-506026	91
	26	35	14	6	985060456014	45T6C14-506026	97
	30	40	15	6	985060456015	45T6C15-506030	103
	30	40	16	6	985060456016	45T6C16-506030	109
	30	40	17	6	985060456017	45T6C17-506030	115
	37	50	18	6	985060456018	45T6C18-506037	121
	37	50	19	6	985060456019	45T6C19-506037	127
	37	50	20	6	985060456020	45T6C20-506037	133
	37	50	21	6	985060456021	45T6C21-506037	139
	45	60	22	6	985060456022	45T6C22-506045	145

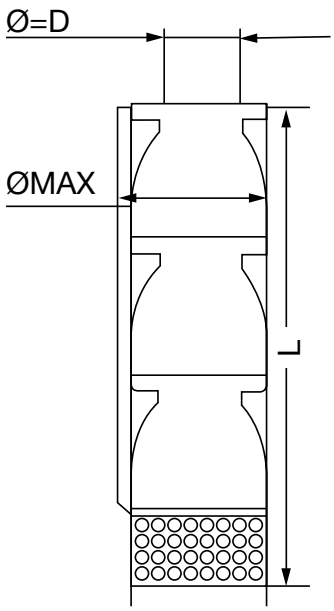

Model Description	Length (mm) - L	Discharge (in) - D	Max Ø (mm)
45T6C2-50603.7	615	3"	153
45T6C3-50605.5	730	3"	153
45T6C4-50607.5	845	3"	153
45T6C5-50609.3	960	3"	153
45T6C6-506011	1075	3"	153
45T6C7-506015	1190	3"	153
45T6C8-506015	1305	3"	153
45T6C9-506018.5	1420	3"	153
45T6C10-506018.5	1535	3"	153
45T6C11-506022	1650	3"	153
45T6C12-506022	1765	3"	153
45T6C13-506026	1880	3"	153
45T6C14-506026	1995	3"	153
45T6C15-506030	2110	3"	153
45T6C16-506030	2225	3"	153
45T6C17-506030	2340	3"	153
45T6C18-506037	2455	3"	153
45T6C19-506037	2570	3"	153
45T6C20-506037	2685	3"	153
45T6C21-506037	2800	3"	153
45T6C22-506045	2915	3"	153

Note: 1* Diameter (ØMax) includes cable guard.
2* Discharge is threaded, 8 TPI, BSPP.

FPS-645T Performance Curve

50 Hz
2900 RPM

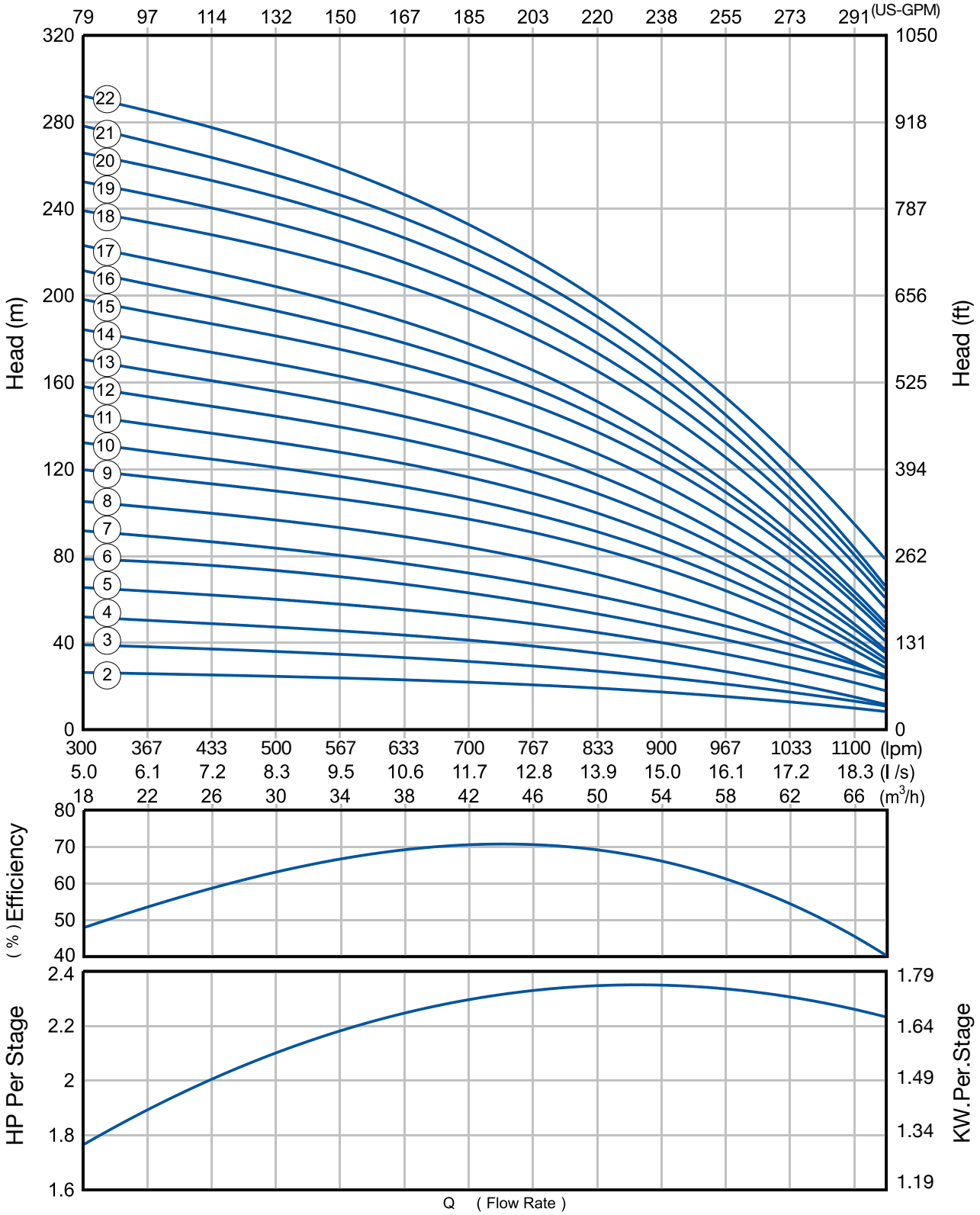

1* Tolerance of curves according to EN 9906 Appendix A

2* The hydraulic working characteristics have been calculated with water at 15°C at the atmospherical pressure of 1 bar

3* Performance curves are based on the kinematic viscosity ν = 1mm^2/s and density ρ = 1000 kg / m^3

FPS T series

FPS-655T Ordering Information

Dimension Information

m3/h	kW	HP	# of Stages	Motor Size	Order No.	Model Description	Weight (kg)
55	5.5	7.5	2	6	985060556002	55T6C2-50605.5	30
	7.5	10	3	6	985060556003	55T6C3-50607.5	35
	9.3	12.5	4	6	985060556004	55T6C4-50609.3	40
	11	15	5	6	985060556005	55T6C5-506011	45
	15	20	6	6	985060556006	55T6C6-506015	50
	18.5	25	7	6	985060556007	55T6C7-506018.5	55
	18.5	25	8	6	985060556008	55T6C8-506018.5	60
	22	30	9	6	985060556009	55T6C9-506022	65
	22	30	10	6	985060556010	55T6C10-506022	70
	26	35	11	6	985060556011	55T6C11-506026	75
	26	35	12	6	985060556012	55T6C12-506026	80
	30	40	13	6	985060556013	55T6C13-506030	85
	37	50	14	6	985060556014	55T6C14-506037	90
	37	50	15	6	985060556015	55T6C15-506037	95
	37	50	16	6	985060556016	55T6C16-506037	100
	37	50	17	6	985060556017	55T6C17-506037	105
	45	60	18	6	985060556018	55T6C18-506045	110
	45	60	19	6	985060556019	55T6C19-506045	115
	45	60	20	6	985060556020	55T6C20-506045	120

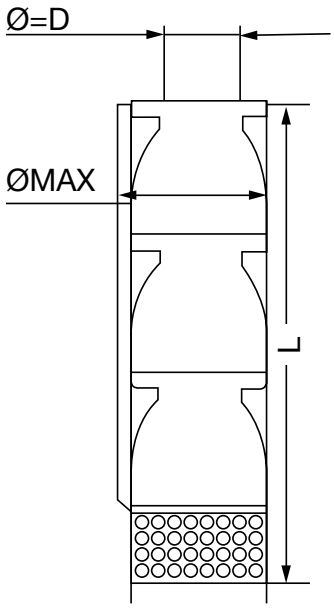

Model Description	Length (mm) - L	Discharge (in) - D	Max Ø (mm)
55T6C2-50605.5	615	4"	153
55T6C3-50607.5	730	4"	153
55T6C4-50609.3	845	4"	153
55T6C5-506011	960	4"	153
55T6C6-506015	1075	4"	153
55T6C7-506018.5	1190	4"	153
55T6C8-506018.5	1305	4"	153
55T6C9-506022	1420	4"	153
55T6C10-506022	1535	4"	153
55T6C11-506026	1650	4"	153
55T6C12-506026	1765	4"	153
55T6C13-506030	1880	4"	153
55T6C14-506037	1995	4"	153
55T6C15-506037	2110	4"	153
55T6C16-506037	2225	4"	153
55T6C17-506037	2340	4"	153
55T6C18-506045	2455	4"	153
55T6C19-506045	2570	4"	153
55T6C20-506045	2685	4"	154

Note: 1* Diameter (ØMax) includes cable guard.
2* Discharge is threaded, 8 TPI, BSPP.

FPS-655T Performance Curve

50 Hz
2900 RPM

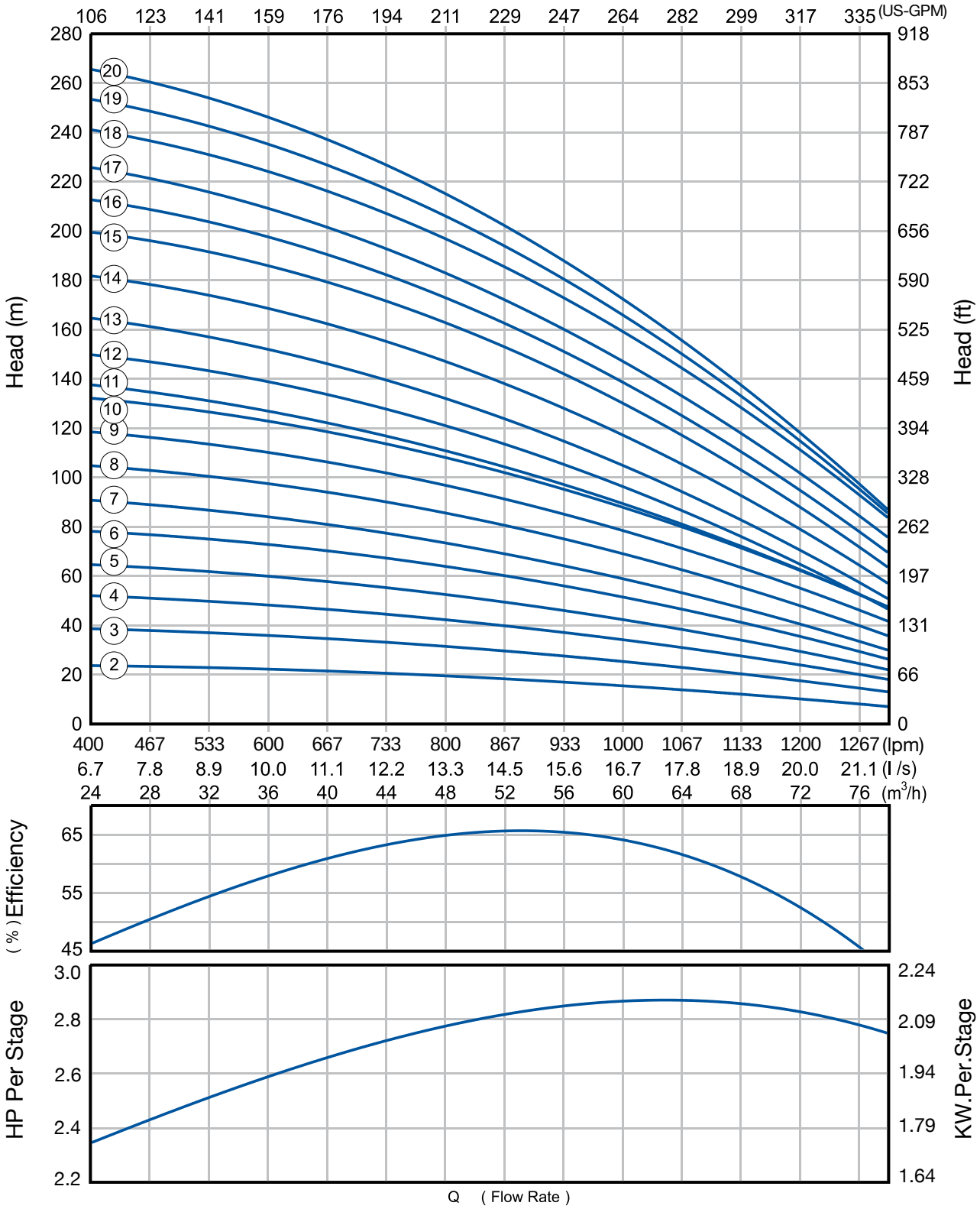

1* Tolerance of curves according to EN 9906 Appendix A

2* The hydraulic working characteristics have been calculated with water at 15°C at the atmospherical pressure of 1 bar

3* Performance curves are based on the kinematic viscosity ν = 1mm^2/s and density ρ = 1000 kg / m^3

FPS T series

FPS-680T Ordering Information

Dimension Information

m3/h	kW	HP	# of Stages	Motor Size	Order No.	Model Description	Weight (kg)
80	3.7	5	1	6	985060806001	80T6C1-50603.7	20
	5.5	7.5	2	6	985060806002	80T6C2-50605.5	26
	9.3	12.5	3	6	985060806003	80T6C3-50609.3	33
	11	15	4	6	985060806004	80T6C4-506011	39
	15	20	5	6	985060806005	80T6C5-506015	45
	18.5	25	6	6	985060806006	80T6C6-506018.5	52
	18.5	25	7	6	985060806007	80T6C7-506018.5	58
	22	30	8	6	985060806008	80T6C8-506022	64
	26	35	9	6	985060806009	80T6C9-506026	71
	26	35	10	6	985060806010	80T6C10-506026	77
	30	40	11	6	985060806011	80T6C11-506030	83
	37	50	12	6	985060806012	80T6C12-506037	90
	37	50	13	6	985060806013	80T6C13-506037	96
	37	50	14	6	985060806014	80T6C14-506037	102
	45	60	15	6	985060806015	80T6C15-506045	109
	45	60	16	6	985060806016	80T6C16-506045	115
	45	60	17	6	985060806017	80T6C17-506045	121

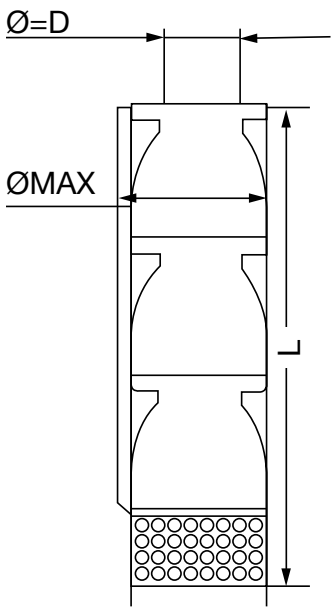

Model Description	Length (mm) - L	Discharge (in) - D	Max Ø (mm)
80TC1-50603.7	535	4"	153
80TC2-50605.5	675	4"	153
80TC3-50609.3	815	4"	153
80TC4-506011	955	4"	153
80TC5-506015	1095	4"	153
80TC6-506018.5	1235	4"	153
80TC7-506018.5	1375	4"	153
80TC8-506022	1515	4"	153
80TC9-506026	1655	4"	153
80TC10-506026	1795	4"	153
80TC11-506030	1935	4"	153
80TC12-506037	2075	4"	153
80TC13-506037	2215	4"	153
80TC14-506037	2355	4"	153
80TC15-506045	2495	4"	153
80TC16-506045	2635	4"	153
80TC17-506045	2775	4"	153

Note: 1* Diameter (ØMax) includes cable guard.
2* Discharge is threaded, 8 TPI, BSPP.

FPS-680T Performance Curve

50 Hz
2900 RPM

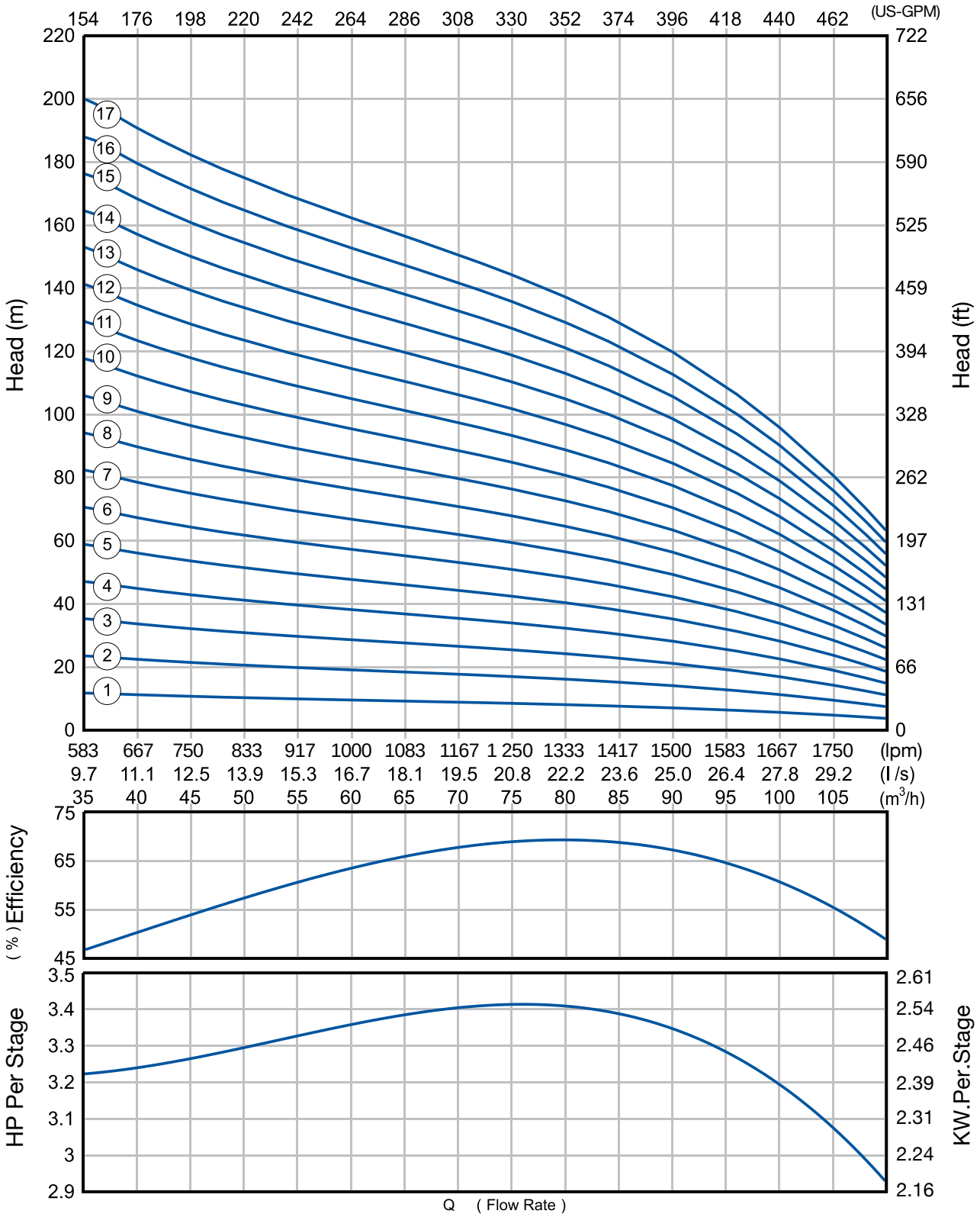

1* Tolerance of curves according to EN 9906 Appendix A

2* The hydraulic working characteristics have been calculated with water at 15°C at the atmospherical pressure of 1 bar

3* Performance curves are based on the kinematic viscosity ν = 1mm^2/s and density ρ = 1000 kg / m^3

FPS T series

FPS-690T Ordering Information

Dimension Information

m3/h	kW	HP	# of Stages	Motor Size	Order No.	Model Description	Weight (kg)
90	3.7	5	1	6	985060906001	90T6C1-50603.7	24
	7.5	10	2	6	985060906002	90T6C2-50607.5	31
	11	15	3	6	985060906003	90T6C3-506011	37
	15	20	4	6	985060906004	90T6C4-506015	44
	18.5	25	5	6	985060906005	90T6C5-506018.5	50
	22	30	6	6	985060906006	90T6C6-506022	57
	26	35	7	6	985060906007	90T6C7-506026	63
	30	40	8	6	985060906008	90T6C8-506030	70
	37	50	9	6	985060906009	90T6C9-506037	76
	37	50	10	6	985060906010	90T6C10-506037	83
	45	60	11	6	985060906011	90T6C11-506045	89
	45	60	12	6	985060906012	90T6C12-506045	96

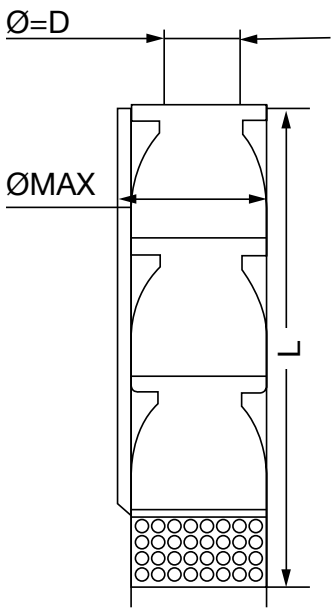

Model Description	Length (mm) - L	Discharge (in) - D	Max Ø (mm)
90T6C1-50603.7	180	4"	153
90T6C2-50607.5	320	4"	153
90T6C3-506011	460	4"	153
90T6C4-506015	600	4"	153
90T6C5-506018.5	740	4"	153
90T6C6-506022	880	4"	153
90T6C7-506026	1020	4"	153
90T6C8-506030	1160	4"	153
90T6C9-506037	1300	4"	153
90T6C10-506037	1440	4"	153
90T6C11-506045	1580	4"	153
90T6C12-506045	1720	4"	153

Note: 1* Diameter (ØMax) includes cable guard.
2* Discharge is threaded, 8 TPI, BSPP.

FPS-690T Performance Curve

50 Hz
2900 RPM

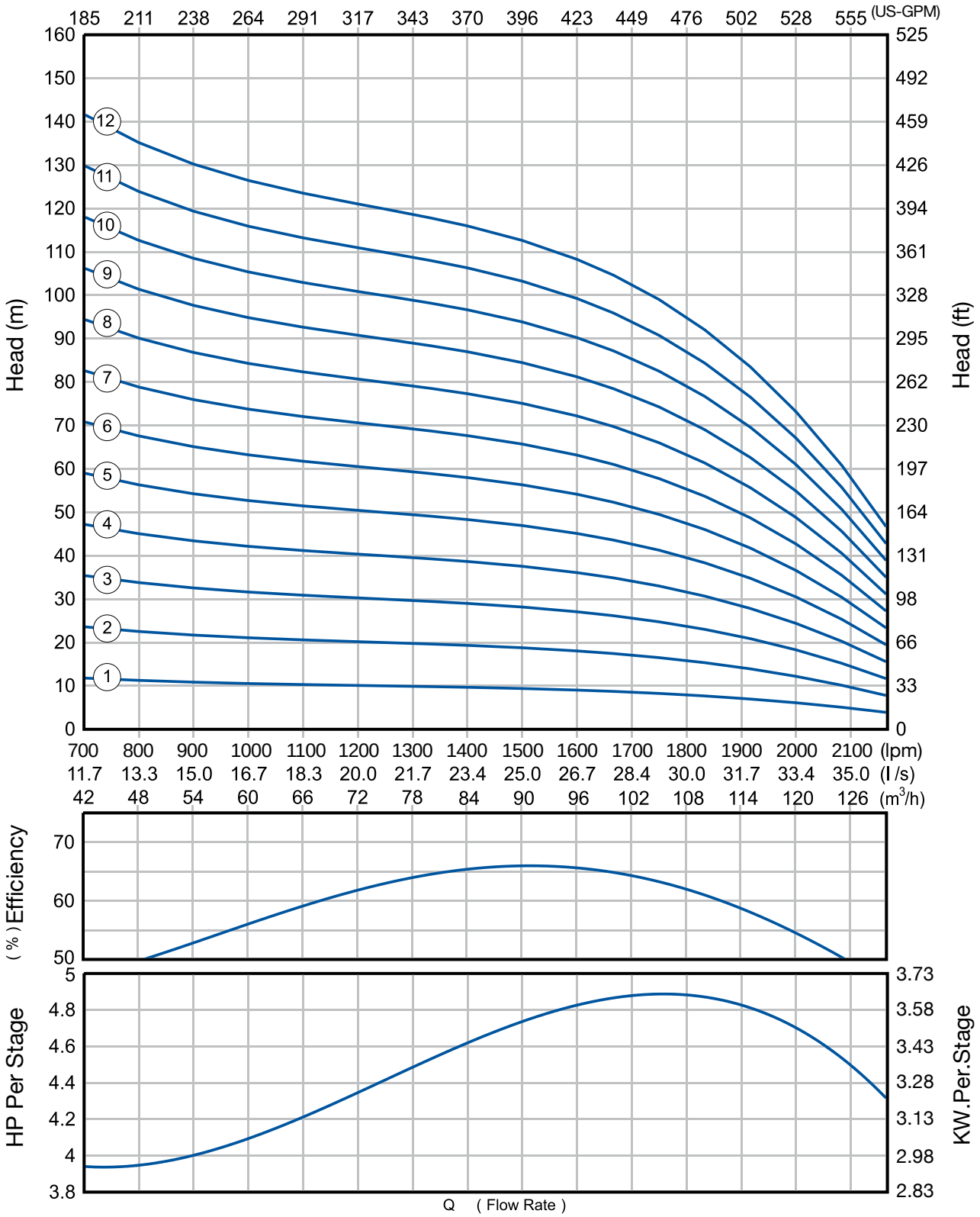

1* Tolerance of curves according to EN 9906 Appendix A

2* The hydraulic working characteristics have been calculated with water at 15°C at the atmospherical pressure of 1 bar

3* Performance curves are based on the kinematic viscosity ν = 1mm^2/s and density ρ = 1000 kg / m^3

FPS T series

FPS-7100T Ordering Information

Dimension Information

m3/h	kW	HP	# of Stages	Motor Size	Order No.	Model Description	Weight (kg)
100	7.5	10	1	6	985071006001	100T7C1-50607.5	32
	15	20	2	6	985071006002	100T7C2-506015	41
	22	30	3	6	985071006003	100T7C3-506022	50
	30	40	4	6	985071006004	100T7C4-506030	59
	37	50	5	6	985071006005	100T7C5-506037	68
	37	50	5	8	985071008005	100T7C5-508037	71
	45	60	6	6	985071006006	100T7C6-506045	77
	45	60	6	8	985071008006	100T7C6-508045	80
	52	70	7	8	985071008007	100T7C7-508052	89
	55	75	8	8	985071008008	100T7C8-508055	98
	67	90	9	8	985071008009	100T7C9-508067	107
	75	100	10	8	985071008010	100T7C10-508075	116
	75	100	11	8	985071008011	100T7C11-508075	125
	83	110	12	8	985071008012	100T7C12-508083	134
	93	125	13	8	985071008013	100T7C13-508093	143
	110	150	14	8	985071008014	100T7C14-508110	152

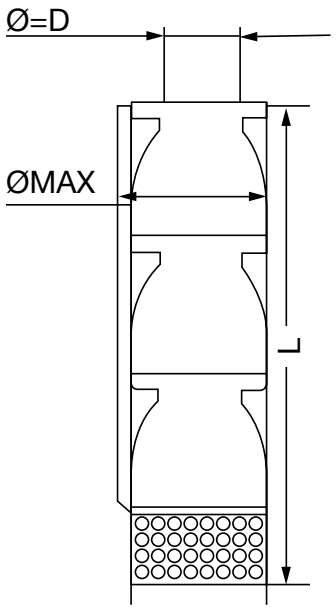

Model Description	Length (mm) - L	Discharge (in) - D	Max Ø (mm)
100T7C1-50607.5	510	4"	180
100T7C2-506015	640	4"	180
100T7C3-506022	770	4"	180
100T7C4-506030	900	4"	180
100T7C5-506037	1030	4"	195
100T7C5-508037	1070	4"	195
100T7C6-506045	1160	4"	195
100T7C6-508045	1200	4"	195
100T7C7-508052	1330	4"	195
100T7C8-508055	1460	4"	195
100T7C9-508067	1590	4"	195
100T7C10-508075	1720	4"	195
100T7C11-508075	1850	4"	195
100T7C12-508083	1980	4"	195
100T7C13-508093	2110	4"	195
100T7C14-508110	2240	4"	195

Note: 1* Diameter (ØMax) includes cable guard.
2* Discharge is threaded, 8 TPI, BSPP.

FPS-7100T Performance Curve

50 Hz
2900 RPM

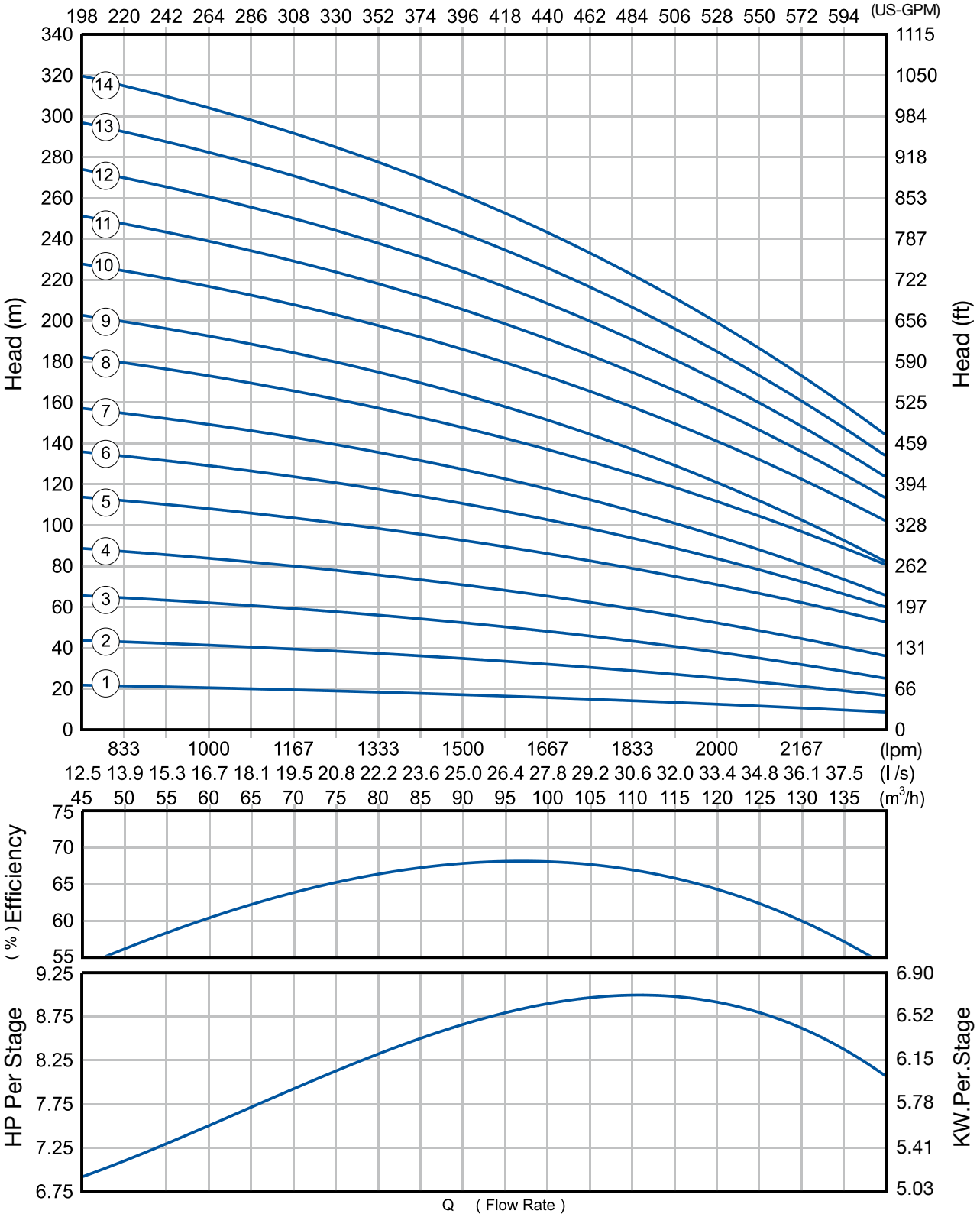

1* Tolerance of curves according to EN 9906 Appendix A

2* The hydraulic working characteristics have been calculated with water at 15℃ at the atmospherical pressure of 1 bar

3* Performance curves are based on the kinematic viscosity ν = 1mm^2/s and density ρ = 1000 kg / m^3

FPS T series

FPS-7155T Ordering Information

Dimension Information

m3/h	kW	HP	# of Stages	Motor Size	Order No.	Model Description	Weight (kg)
155	9.3	12.5	1	6	985071556001	155T7C1-50609.3	37
	18.5	25	2	6	985071556002	155T7C2-506018.5	45
	26	35	3	6	985071556003	155T7C3-506026	54
	37	50	4	6	985071556004	155T7C4-506037	62
	37	50	4	8	985071558004	155T7C4-508037	62
	45	60	5	6	985071556005	155T7C5-506045	71
	45	60	5	8	985071558005	155T7C5-508045	71
	52	70	6	8	985071558006	155T7C6-508052	79
	55	75	7	8	985071558007	155T7C7-508055	88
	67	90	8	8	985071558008	155T7C8-508067	97
	75	100	9	8	985071558009	155T7C9-508075	105
	83	110	10	8	985071558010	155T7C10-508083	114
	93	125	11	8	985071558011	155T7C11-508093	122
	110	150	12	8	985071558012	155T7C12-508110	131

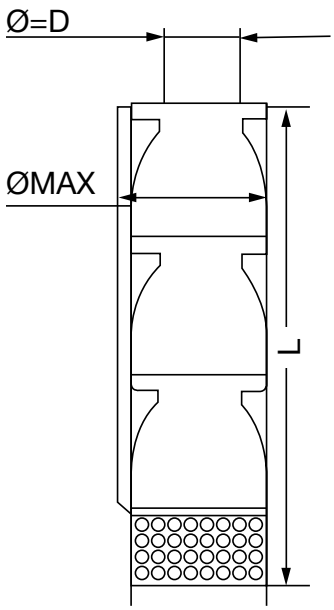

Model Description	Length (mm) - L	Discharge (in) - D	Max Ø (mm)
155T7C1-50609.3	700	5"	180
155T7C2-506018.5	865	5"	180
155T7C3-506026	1030	5"	180
155T7C4-506037	1195	5"	180
155T7C4-508037	1195	5"	180
155T7C5-506045	1360	5"	180
155T7C5-508045	1360	5"	180
155T7C6-508052	1525	5"	180
155T7C7-508055	1690	5"	180
155T7C8-508067	1855	5"	180
155T7C9-508075	2020	5"	180
155T7C10-508083	2185	5"	180
155T7C11-508093	2350	5"	180
155T7C12-508110	2515	5"	180

Note: 1* Diameter (ØMax) includes cable guard.
2* Discharge is threaded, 8 TPI, BSPP.

FPS-7155T Performance Curve

50 Hz
2900 RPM

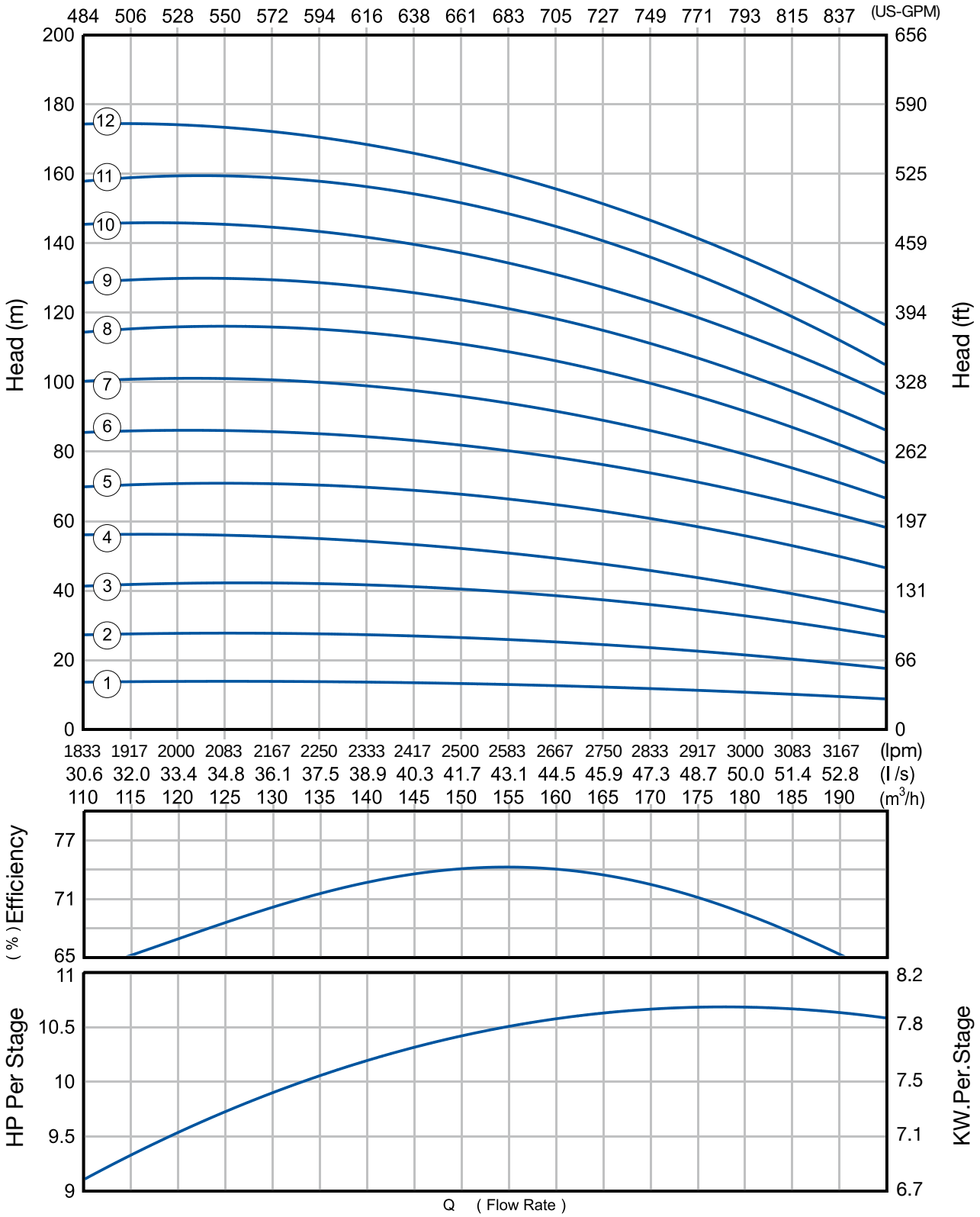

1* Tolerance of curves according to EN 9906 Appendix A

2* The hydraulic working characteristics have been calculated with water at 15°C at the atmospherical pressure of 1 bar

3* Performance curves are based on the kinematic viscosity ν = 1mm^2/s and density ρ = 1000 kg / m^3

FPS T series

FPS-8110T Ordering Information

Dimension Information

m3/h	kW	HP	# of Stages	Motor Size	Order No.	Model Description	Weight (kg)
110	7.5	10	1	6	985081106001	110T8C1-50607.5	35
	15	20	2	6	985081106002	110T8C2-506015	46
	22	30	3	6	985081106003	110T8C3-506022	57
	30	40	4	6	985081106004	110T8C4-506030	68
	30	40	4	8	985081108004	110T8C4-508030	75
	37	50	5	6	985081106005	110T8C5-506037	79
	37	50	5	8	985081108005	110T8C5-508037	86
	45	60	6	6	985081106006	110T8C6-506045	90
	45	60	6	8	985081108006	110T8C6-508045	97
	52	70	7	8	985081108007	110T8C7-508052	108
	55	75	8	8	985081108008	110T8C8-508055	119
	67	90	9	8	985081108009	110T8C9-508067	130
	75	100	10	8	985081108010	110T8C10-508075	141
	83	110	11	8	985081108011	110T8C11-508083	152
	93	125	12	8	985081108012	110T8C12-508093	163
	93	125	13	8	985081108013	110T8C13-508093	174
	110	150	14	8	985081108014	110T8C14-508110	185

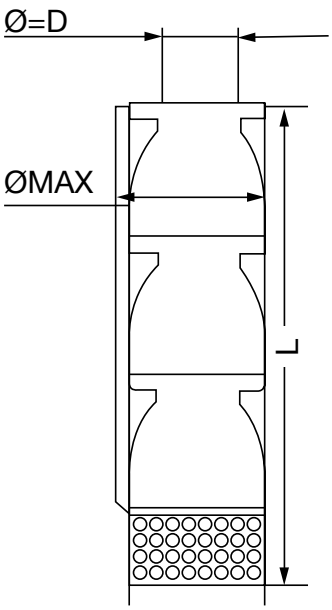

Model Description	Length (mm) - L	Discharge (in) - D	Max Ø (mm)
110T8C1-50607.5	560	5"	200
110T8C2-506015	700	5"	200
110T8C3-506022	840	5"	205
110T8C4-506030	980	5"	205
110T8C4-508030	1110	5"	205
110T8C5-506037	1120	5"	205
110T8C5-508037	1250	5"	205
110T8C6-506045	1260	5"	205
110T8C6-508045	1390	5"	205
110T8C7-508052	1530	5"	205
110T8C8-508055	1670	5"	205
110T8C9-508067	1810	5"	205
110T8C10-508075	1950	5"	205
110T8C11-508083	2090	5"	205
110T8C12-508093	2230	5"	205
110T8C13-508093	2370	5"	205
110T8C14-508110	2510	5"	205

Note: 1* Diameter (ØMax) includes cable guard.
2* Discharge is threaded, 8 TPI, BSPP.

FPS-8110T Performance Curve

50 Hz
2900 RPM

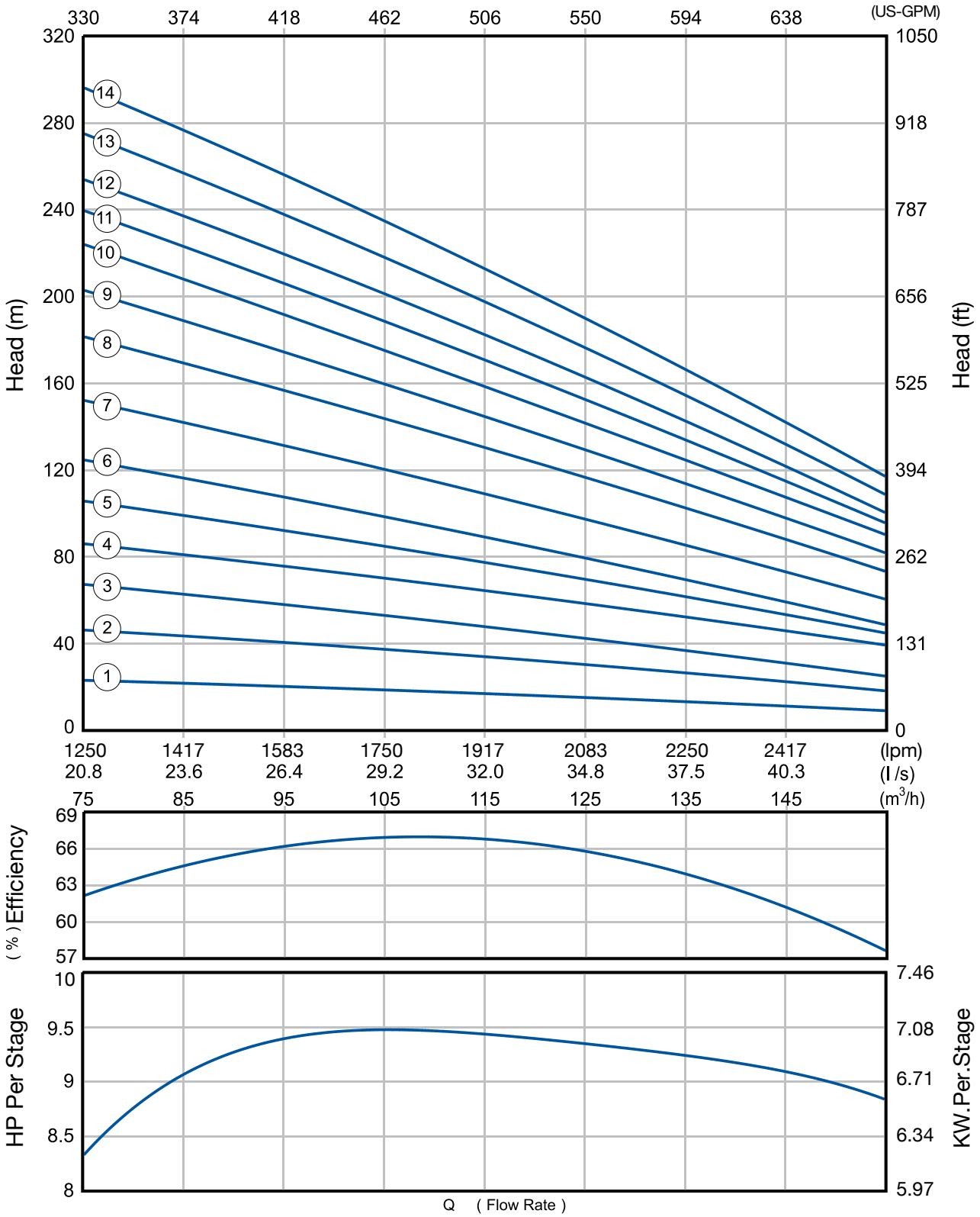

1* Tolerance of curves according to EN 9906 Appendix A

2* The hydraulic working characteristics have been calculated with water at 15°C at the atmospherical pressure of 1 bar

3* Performance curves are based on the kinematic viscosity ν = 1mm^2/s and density ρ = 1000 kg / m^3

FPS T series

FPS-8130T Ordering Information

Dimension Information

m3/h	kW	HP	# of Stages	Motor Size	Order No.	Model Description	Weight (kg)
130	11	15	1	6	985081306001	130T8C1-506011	36
	22	30	2	6	985081306002	130T8C2-506022	47
	30	40	3	6	985081306003	130T8C3-506030	59
	30	40	3	8	985081308003	130T8C3-508030	61
	45	60	4	6	985081306004	130T8C4-506045	70
	45	60	4	8	985081308004	130T8C4-508045	73
	52	70	5	8	985081308005	130T8C5-508052	85
	60	80	6	8	985081308006	130T8C6-508060	96
	75	100	7	8	985081308007	130T8C7-508075	108
	83	110	8	8	985081308008	130T8C8-508083	119
	93	125	9	8	985081308009	130T8C9-508093	131
	110	150	10	8	985081308010	130T8C10-508110	143
	110	150	11	8	985081308011	130T8C11-508110	154
	130	175	12	8	985081308012	130T8C12-508130	166

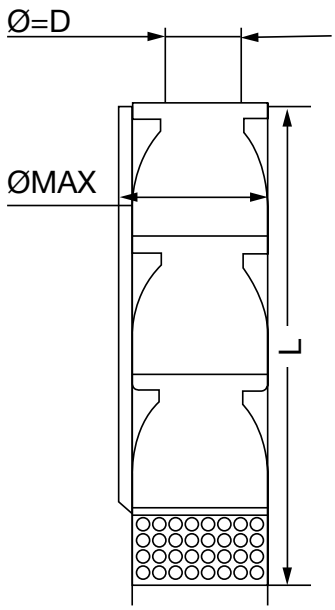

Model Description	Length (mm) - L	Discharge (in) - D	Max Ø (mm)
130T8C1-506011	545	5"	200
130T8C2-506022	685	5"	205
130T8C3-506030	825	5"	205
130T8C3-508030	870	5"	205
130T8C4-506045	965	5"	205
130T8C4-508045	1010	5"	205
130T8C5-508052	1150	5"	205
130T8C6-508060	1290	5"	205
130T8C7-508075	1430	5"	205
130T8C8-508083	1570	5"	205
130T8C9-508093	1710	5"	205
130T8C10-508110	1850	5"	205
130T8C11-508110	1990	5"	205
130T8C12-508130	2130	5"	205

Note: 1* Diameter (ØMax) includes cable guard.
2* Discharge is threaded, 8 TPI, BSPP.

FPS-8130T Performance Curve

50 Hz
2900 RPM

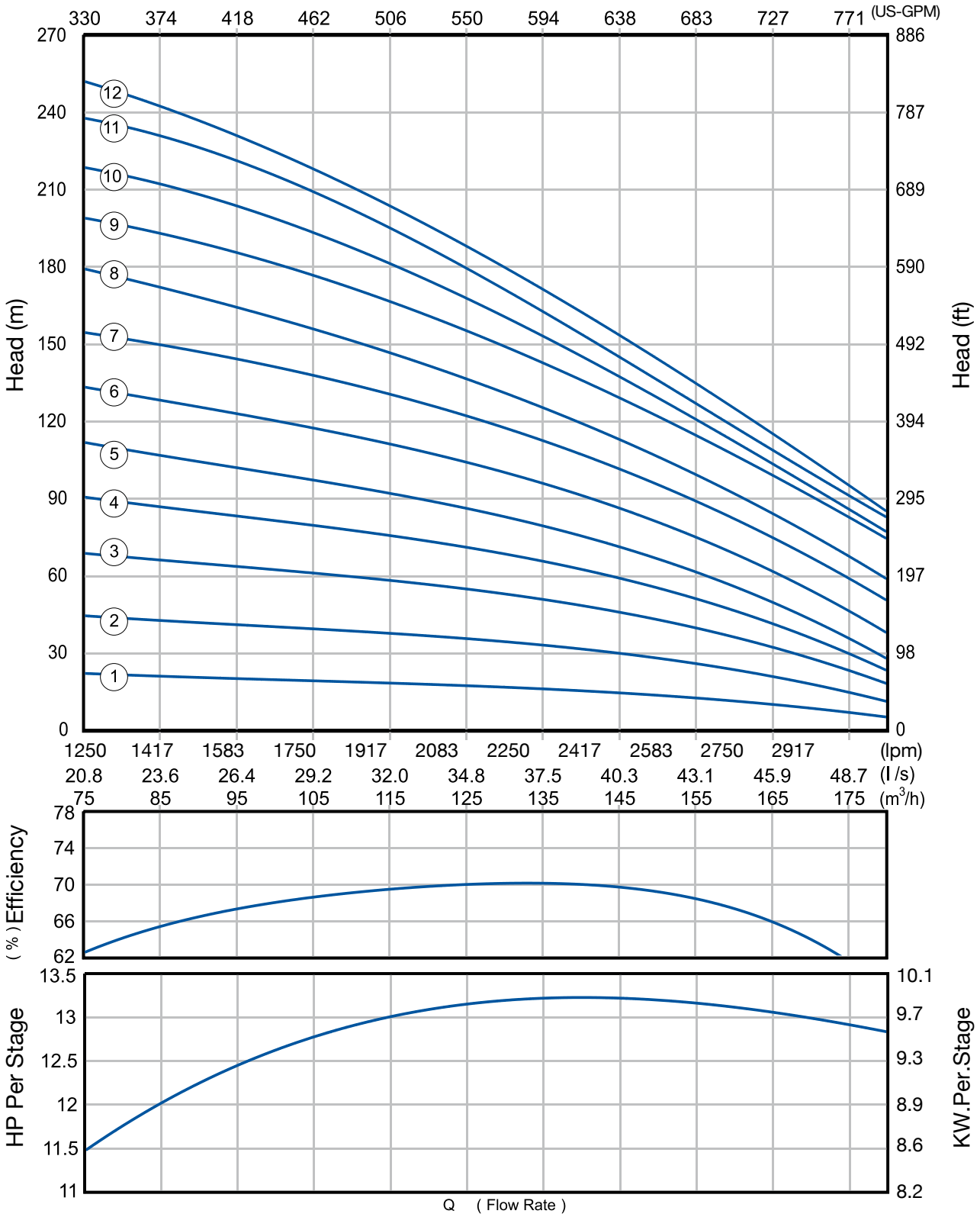

1* Tolerance of curves according to EN 9906 Appendix A

2* The hydraulic working characteristics have been calculated with water at 15°C at the atmospherical pressure of 1 bar

3* Performance curves are based on the kinematic viscosity ν = 1mm^2/s and density ρ = 1000 kg / m^3

FPS T series

FPS-8190T Ordering Information

Dimension Information

m3/h	kW	HP	# of Stages	Trim	Motor Size	Order No.	Model Description	Weight (kg)
190	9.3	12.5	1	Z	6	985081906501	190T8C1Z-50609.3	44
	11	15	1	X	6	985081906001	190T8C1X-506011	44
	18.5	25	2	Z	6	985081906502	190T8C2Z-506018.5	59
	22	30	2	X	6	985081906002	190T8C2X-506022	59
	30	40	3	Z	6	985081906503	190T8C3Z-506030	75
	30	40	3	Z	8	985081908503	190T8C3Z-508030	75
	37	50	3	X	6	985081906003	190T8C3X-506037	75
	37	50	3	X	8	985081908003	190T8C3X-508037	75
	37	50	4	Z	6	985081906504	190T8C4Z-506037	91
	37	50	4	Z	8	985081908504	190T8C4Z-508037	91
	45	60	4	X	6	985081906004	190T8C4X-506045	91
	45	60	4	X	8	985081908004	190T8C4X-508045	91
	52	70	5	Z	8	985081908505	190T8C5Z-508052	106
	55	75	5	X	8	985081908005	190T8C5X-508055	106
	55	75	6	Z	8	985081908506	190T8C6Z-508055	122
	67	90	6	X	8	985081908006	190T8C6X-508067	122
	67	90	7	Z	8	985081908507	190T8C7Z-508067	137
	83	110	7	X	8	985081908007	190T8C7X-508083	137
	75	100	8	Z	8	985081908508	190T8C8Z-508075	153
	93	125	8	X	8	985081908008	190T8C8X-508093	153
	83	110	9	Z	8	985081908509	190T8C9Z-508083	169
	110	150	9	X	8	985081908009	190T8C9X-508110	169
	93	125	10	Z	8	985081908510	190T8C10Z-508093	184
	110	150	10	X	8	985081908010	190T8C10X-508110	184
	110	150	11	Z	8	985081908511	190T8C11Z-508110	200

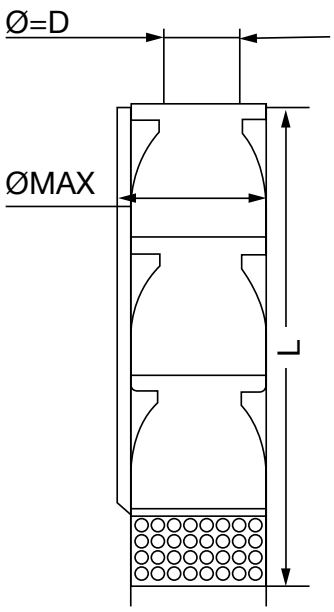

Model Description	Length (mm) - L	Discharge (in) - D	Max Ø (mm)
190T8C1Z-50609.3	720	5"	200
190T8C1X-506011	720	5"	200
190T8C2Z-506018.5	905	5"	200
190T8C2X-506022	905	5"	205
190T8C3Z-506030	1090	5"	205
190T8C3Z-508030	1090	5"	205
190T8C3X-506037	1090	5"	205
190T8C3X-508037	1090	5"	205
190T8C4Z-506037	1275	5"	205
190T8C4Z-508037	1275	5"	205
190T8C4X-506045	1275	5"	205
190T8C4X-508045	1275	5"	205
190T8C5Z-508052	1460	5"	205
190T8C5X-508055	1460	5"	205
190T8C6Z-508055	1645	5"	205
190T8C6X-508067	1645	5"	205
190T8C7Z-508067	1830	5"	205
190T8C7X-508083	1830	5"	205
190T8C8Z-508075	2015	5"	205
190T8C8X-508093	2015	5"	205
190T8C9Z-508083	2200	5"	205
190T8C9X-508110	2200	5"	205
190T8C10Z-508093	2385	5"	205
190T8C10X-508110	2385	5"	205
190T8C11Z-508110	2570	5"	205

Note: 1* Diameter (ØMax) includes cable guard.
2* Discharge is threaded, 8 TPI, BSPP.

FPS-8190T Performance Curve

50 Hz
2900 RPM

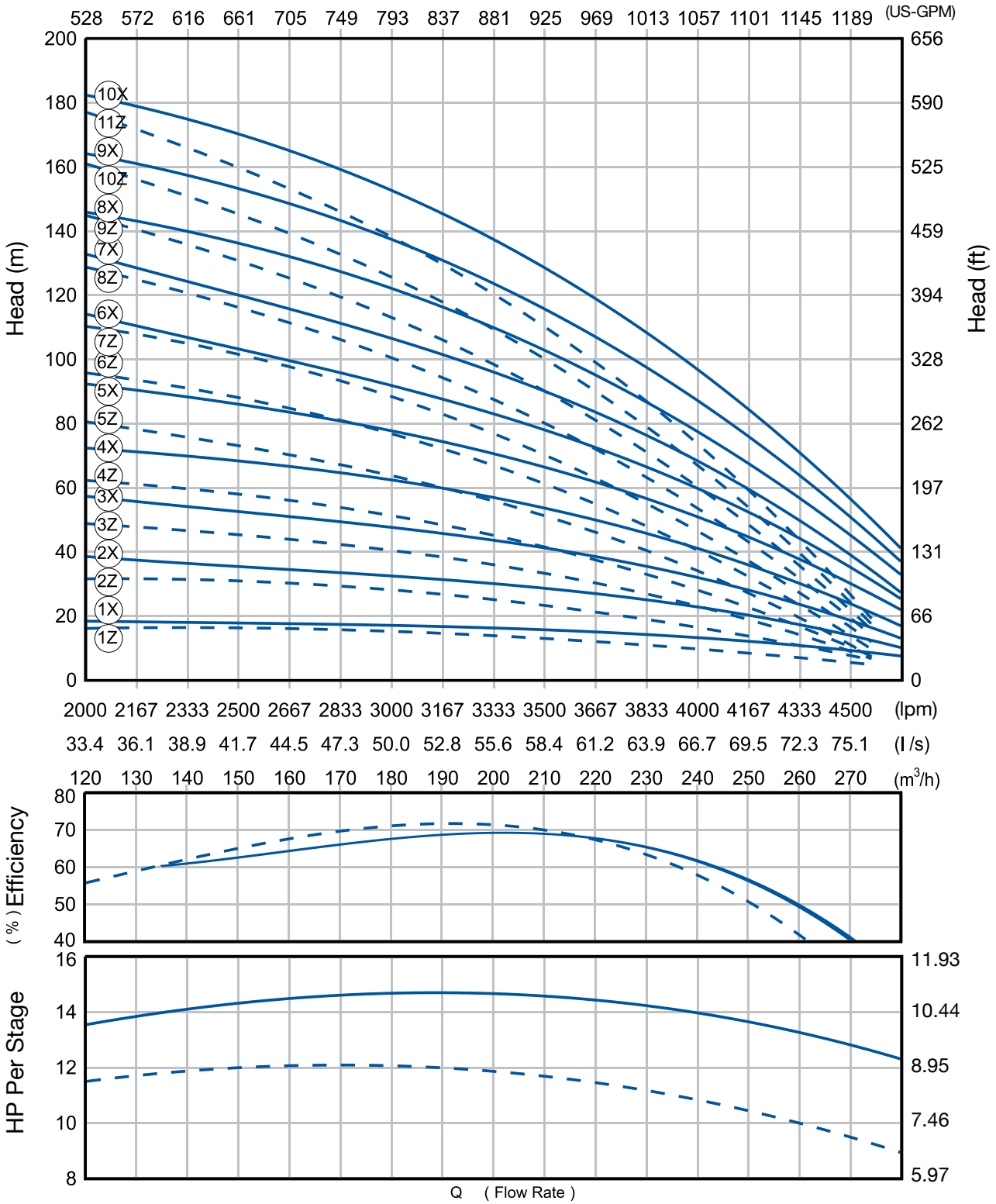

1* Tolerance of curves according to EN 9906 Appendix A

2* The hydraulic working characteristics have been calculated with water at 15°C at the atmospherical pressure of 1 bar

3* Performance curves are based on the kinematic viscosity ν = 1mm^2/s and density ρ = 1000 kg / m^3

FPS T series

FPS-8220T Ordering Information

Dimension Information

m3/h	kW	HP	# of Stages	Trim	Motor Size	Order No.	Model Description	Weight (kg)
220	13	17.5	1	Z	6	985082206501	220T8C1Z-506013	46
	18.5	25	1	X	6	985082206001	220T8C1X-506018.5	47
	26	35	2	Z	6	985082206502	220T8C2Z-506026	60
	37	50	2	X	6	985082206002	220T8C2X-506037	61
	37	50	2	X	8	985082208002	220T8C2X-508037	61
	37	50	3	Z	6	985082206503	220T8C3Z-506037	74
	37	50	3	Z	8	985082208503	220T8C3Z-508037	74
	52	70	3	X	8	985082208003	220T8C3X-508052	76
	52	70	4	Z	8	985082208504	220T8C4Z-508052	90
	67	90	4	X	8	985082208004	220T8C4X-508067	90
	60	80	5	Z	8	985082208505	220T8C5Z-508060	105
	83	110	5	X	8	985082208005	220T8C5X-508083	105
	75	100	6	Z	8	985082208506	220T8C6Z-508075	119
	110	150	6	X	8	985082208006	220T8C6X-508110	119
	93	125	7	Z	8	985082208507	220T8C7Z-508093	130
	110	150	7	X	8	985082208007	220T8C7X-508110	130
	110	150	8	Z	8	985082208508	220T8C8Z-508110	145
	110	150	9	Z	8	985082208509	220T8C9Z-508110	159
	130	175	10	Z	8	985082208510	220T8C10Z-508130	174

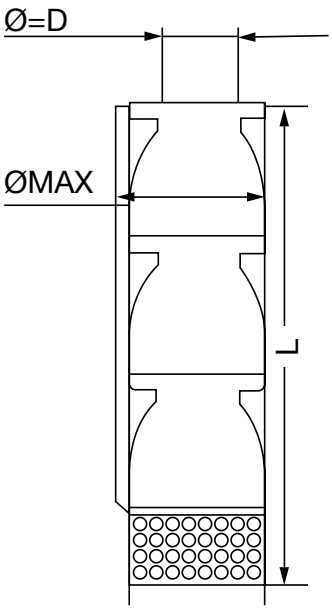

Model Description	Length (mm) - L	Discharge (in) - D	Max Ø (mm)
220T8C1Z-506013	720	5"	200
220T8C1X-506018.5	720	5"	200
220T8C2Z-506026	905	5"	205
220T8C2X-506037	905	5"	205
220T8C2X-508037	905	5"	205
220T8C3Z-506037	1090	5"	205
220T8C3Z-508037	1090	5"	205
220T8C3X-508052	1090	5"	205
220T8C4Z-508052	1275	5"	205
220T8C4X-508067	1275	5"	205
220T8C5Z-508060	1460	5"	205
220T8C5X-508083	1460	5"	205
220T8C6Z-508075	1645	5"	205
220T8C6X-508110	1645	5"	205
220T8C7Z-508093	1830	5"	205
220T8C7X-508110	1830	5"	205
220T8C8Z-508110	2015	5"	205
220T8C9Z-508110	2200	5"	205
220T8C10Z-508130	2385	5"	205

Note: 1* Diameter (ØMax) includes cable guard.
2* Discharge is threaded, 8 TPI, BSPP.

FPS-8220T Performance Curve

50 Hz
2900 RPM

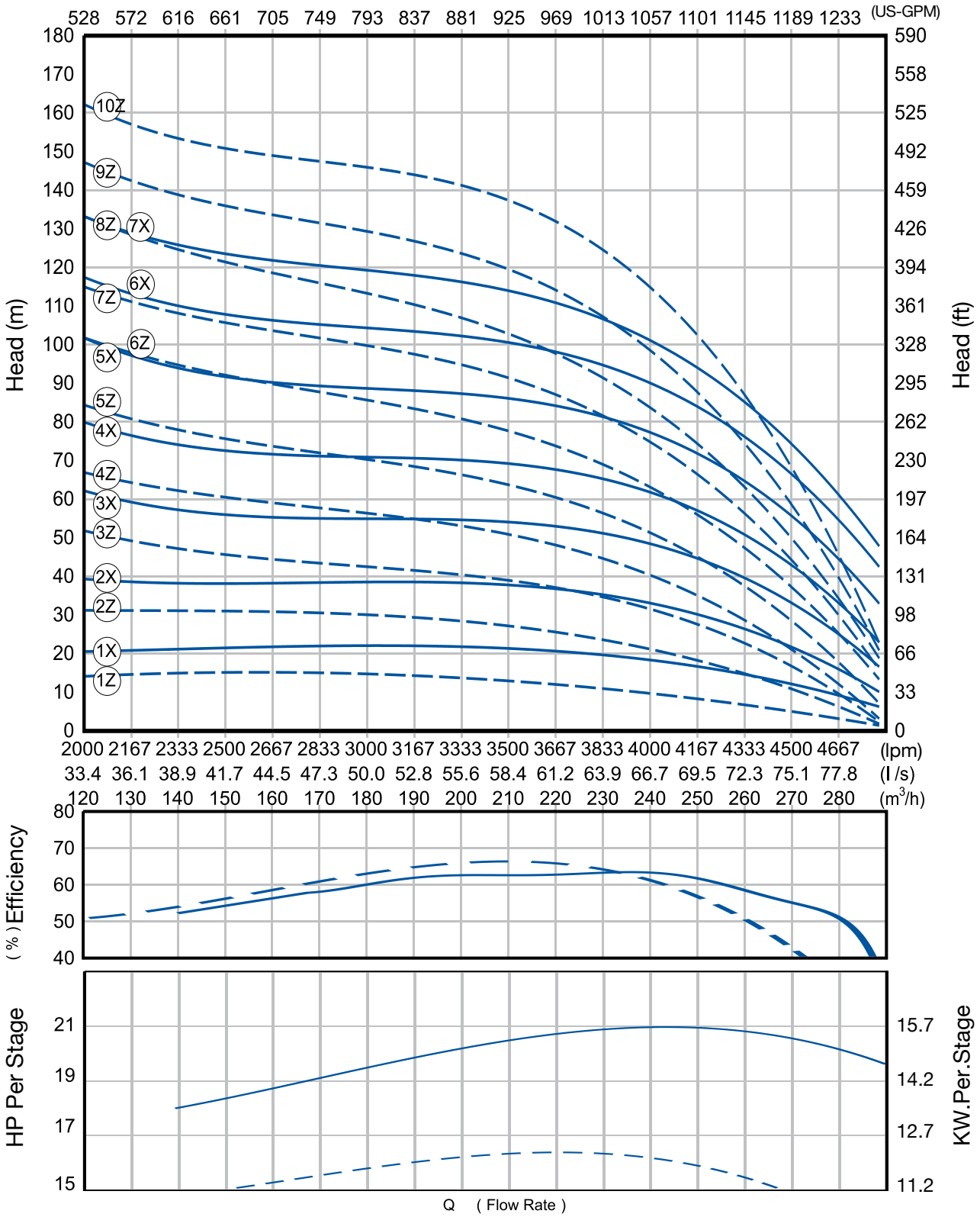

1* Tolerance of curves according to EN 9906 Appendix A

2* The hydraulic working characteristics have been calculated with water at 15°C at the atmospherical pressure of 1 bar

3* Performance curves are based on the kinematic viscosity ν = 1mm^2/s and density ρ = 1000 kg / m^3

FPS T series

FPS-10200T Ordering Information

Dimension Information

m3/h	kW	HP	# of Stages	Trim	Motor Size	Order No.	Model Description	Weight (kg)
200	45	60	2	Z	8	985102008502	200T10C2Z-508045	98
	45	60	2	X	8	985102008002	200T10C2X-508045	98
	60	80	3	Z	8	985102008503	200T10C3Z-508060	125
	67	90	3	X	8	985102008003	200T10C3X-508067	125
	83	110	4	Z	8	985102008504	200T10C4Z-508083	152
	93	125	4	X	8	985102008004	200T10C4X-508093	152
	93	125	4	X	10	985102001004	200T10C4X-510093	152
	110	150	5	Z	8	985102008505	200T10C5Z-508110	179
	110	150	5	Z	10	985102001505	200T10C5Z-510110	179
	110	150	5	X	8	985102008005	200T10C5X-508110	179
	110	150	5	X	10	985102001005	200T10C5X-510110	179
	130	175	6	Z	10	985102001506	200T10C6Z-510130	206
	130	175	6	X	10	985102001006	200T10C6X-510130	206
	150	200	7	Z	10	985102001507	200T10C7Z-510150	233
	150	200	7	X	10	985102001007	200T10C7X-510150	233
	185	250	8	Z	10	985102001508	200T10C8Z-510185	260
	185	250	8	X	10	985102001008	200T10C8X-510185	260
	185	250	9	Z	10	985102001509	200T10C9Z-510185	287

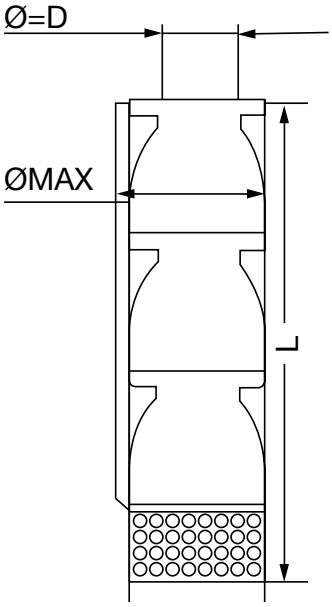

Model Description	Length (mm) - L	Discharge (in) - D	Max Ø (mm)
200T10C2Z-508045	940	6"	265
200T10C2X-508045	940	6"	265
200T10C3Z-508060	1130	6"	265
200T10C3X-508067	1130	6"	265
200T10C4Z-508083	1320	6"	265
200T10C4X-508093	1320	6"	265
200T10C4X-510093	1320	6"	265
200T10C5Z-508110	1510	6"	265
200T10C5Z-510110	1510	6"	265
200T10C5X-508110	1510	6"	265
200T10C5X-510110	1510	6"	265
200T10C6Z-510130	1700	6"	265
200T10C6X-510130	1700	6"	265
200T10C7Z-510150	1890	6"	265
200T10C7X-510150	1890	6"	265
200T10C8Z-510185	2080	6"	265
200T10C8X-510185	2080	6"	265
200T10C9Z-510185	2270	6"	265

Note: 1* Diameter (ØMax) includes cable guard.
2* Discharge is threaded, 11 TPI, BSPP.

FPS-10200T Performance Curve

50 Hz
2900 RPM

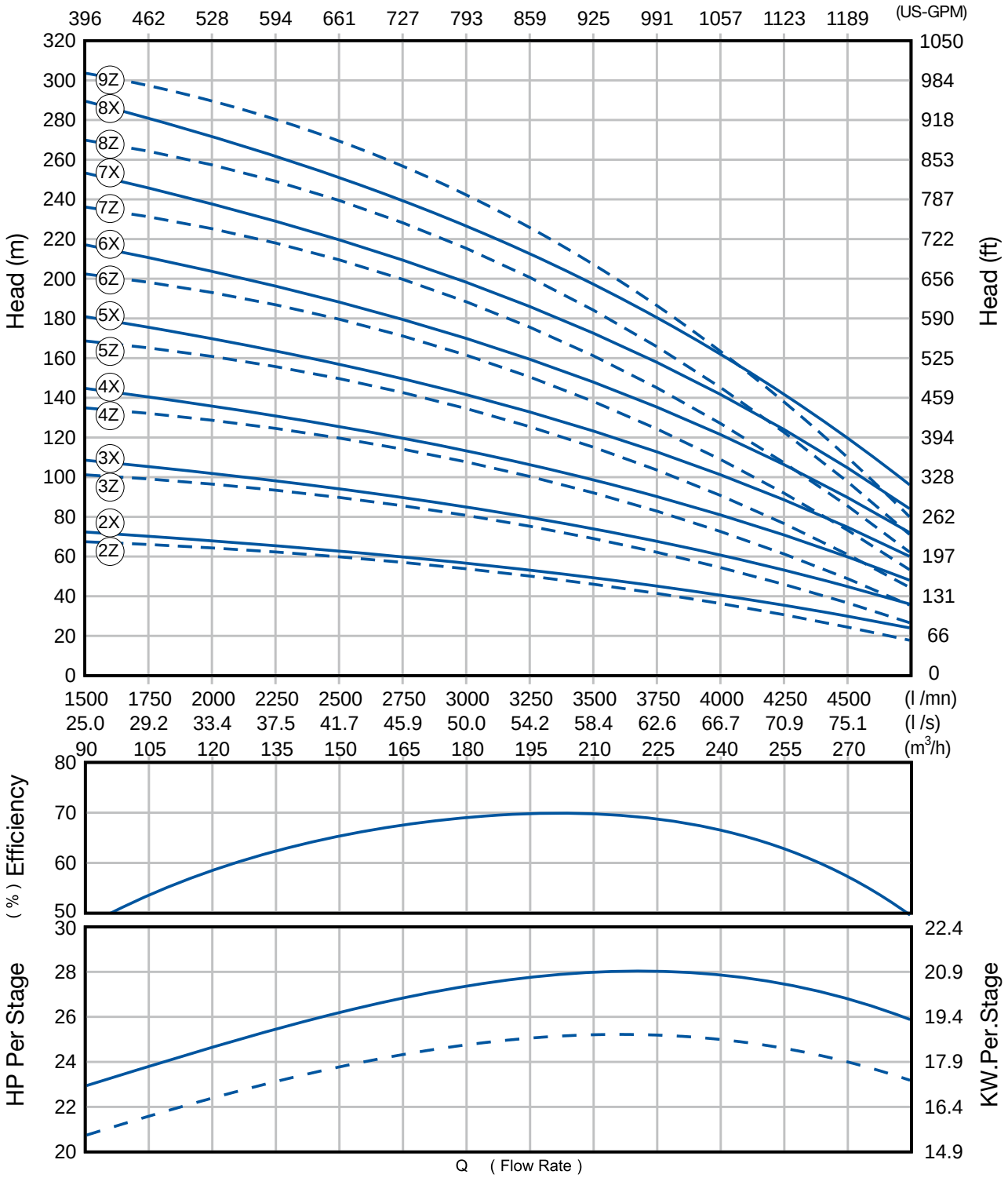

1* Tolerance of curves according to EN 9906 Appendix A

2* The hydraulic working characteristics have been calculated with water at 15°C at the atmospherical pressure of 1 bar

3* Performance curves are based on the kinematic viscosity ν = 1mm^2/s and density ρ = 1000 kg / m^3

FPS T series

FPS-10250T Ordering Information

Dimension Information

m3/h	kW	HP	# of Stages	Trim	Motor Size	Order No.	Model Description	Weight (kg)
250	30	40	1	Z	8	985102508501	250T10C1Z-508030	71
	37	50	1	X	8	985102508001	250T10C1X-508037	71
	55	75	2	Z	8	985102508502	250T10C2Z-508055	98
	67	90	2	X	8	985102508002	250T10C2X-508067	98
	93	125	3	Z	8	985102508503	250T10C3Z-508093	125
	110	150	3	X	8	985102508003	250T10C3X-508110	125
	110	150	3	X	10	985102501003	250T10C3X-510110	125
	110	150	4	Z	8	985102508504	250T10C4Z-508110	152
	110	150	4	Z	10	985102501504	250T10C4Z-510110	152
	130	175	4	X	8	985102508004	250T10C4X-508130	152
	130	175	4	X	10	985102501004	250T10C4X-510130	152
	150	200	5	Z	8	985102508505	250T10C5Z-508150	179
	150	200	5	Z	10	985102501505	250T10C5Z-510150	179
	185	250	5	X	10	985102501005	250T10C5X-510185	179
	185	250	6	Z	10	985102501506	250T10C6Z-510185	206

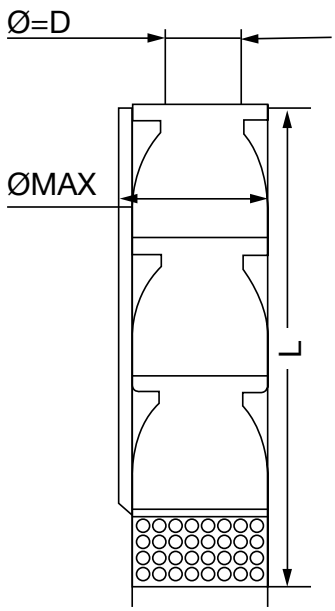

Model Description	Length (mm) - L	Discharge (in) - D	Max Ø (mm)
250T10C1Z-508030	750	6"	265
250T10C1X-508037	750	6"	265
250T10C2Z-508055	940	6"	265
250T10C2X-508067	940	6"	265
250T10C3Z-508093	1130	6"	265
250T10C3X-508110	1130	6"	265
250T10C3X-510110	1130	6"	265
250T10C4Z-508110	1320	6"	265
250T10C4Z-510110	1320	6"	265
250T10C4X-508130	1320	6"	265
250T10C4X-510130	1320	6"	265
250T10C5Z-508150	1510	6"	265
250T10C5Z-510150	1510	6"	265
250T10C5X-510185	1510	6"	265
250T10C6Z-510185	1700	6"	265

Note: 1* Diameter (ØMax) includes cable guard.
2* Discharge is threaded, 11 TPI, BSPP.

FPS-10250T Performance Curve

50 Hz
2900 RPM

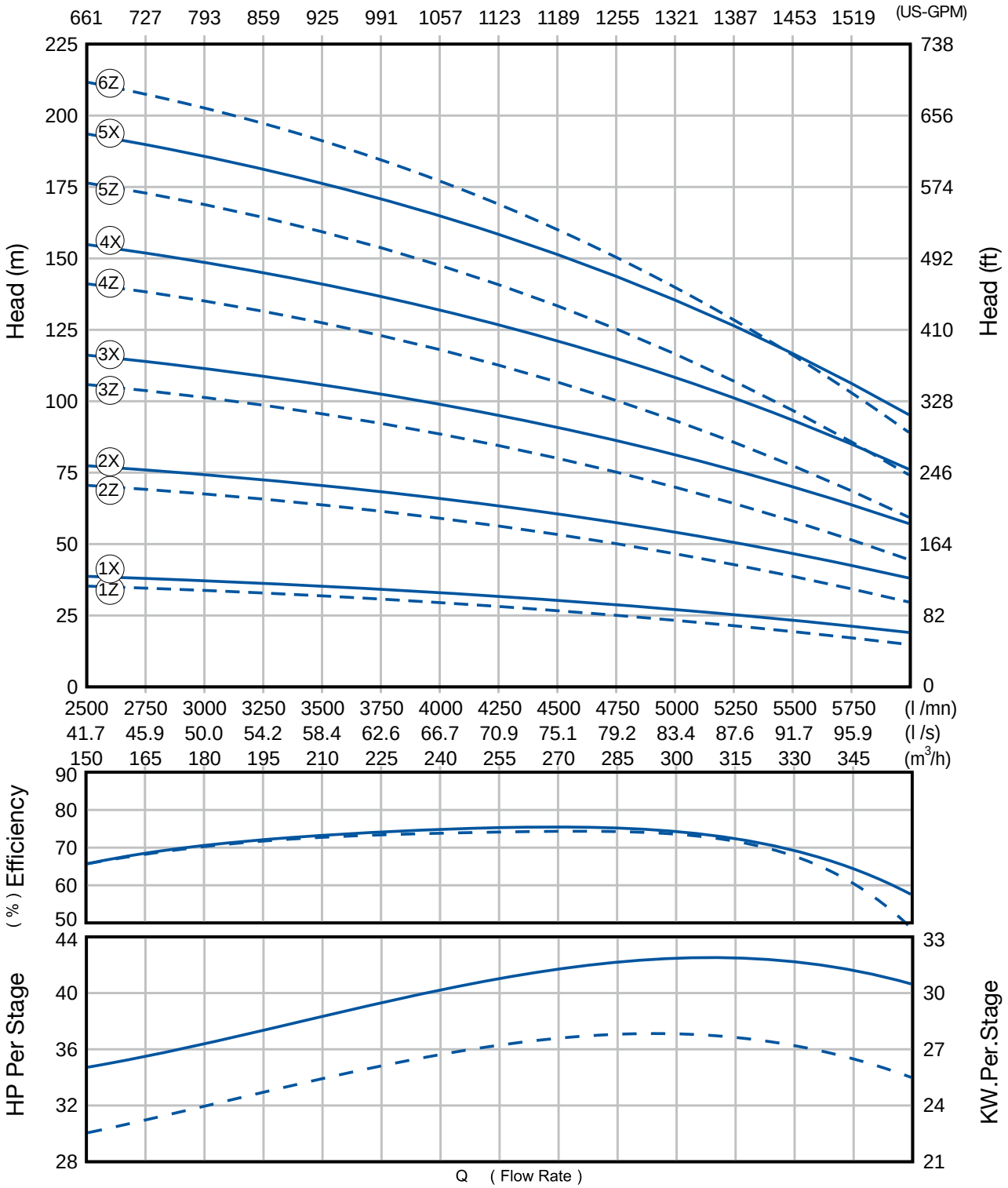

1* Tolerance of curves according to EN 9906 Appendix A

2* The hydraulic working characteristics have been calculated with water at 15°C at the atmospherical pressure of 1 bar

3* Performance curves are based on the kinematic viscosity ν = 1mm^2/s and density ρ = 1000 kg / m^3

FPS T series

FPS-10300T Ordering Information

Dimension Information

m3/h	kW	HP	# of Stages	Trim	Motor Size	Order No.	Model Description	Weight (kg)
300	37	50	1	Z	8	985103008501	300T10C1Z-508037	64
	45	60	1	X	8	985103008001	300T10C1X-508045	64
	67	90	2	Z	8	985103008502	300T10C2Z-508067	89
	83	110	2	X	8	985103008002	300T10C2X-508083	89
	110	150	3	Z	8	985103008503	300T10C3Z-508110	113
	110	150	3	Z	10	985103001503	300T10C3Z-510110	113
	110	150	3	X	8	985103008003	300T10C3X-508110	113
	110	150	3	X	10	985103001003	300T10C3X-510110	113
	150	200	4	Z	8	985103008504	300T10C4Z-508150	138
	150	200	4	Z	10	985103001504	300T10C4Z-510150	138
	150	200	4	X	8	985103008004	300T10C4X-508150	138
	150	200	4	X	10	985103001004	300T10C4X-510150	138
	185	250	5	Z	10	985103001505	300T10C5Z-510185	162
	185	250	5	X	10	985103001005	300T10C5X-510185	162

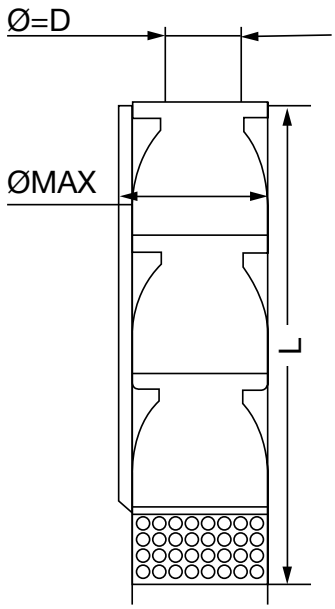

Model Description	Length (mm) - L	Discharge (in) - D	Max Ø (mm)
300T10C1Z-508037	735	6"	265
300T10C1X-508045	735	6"	265
300T10C2Z-508067	920	6"	265
300T10C2X-508083	920	6"	265
300T10C3Z-508110	1105	6"	265
300T10C3Z-510110	1105	6"	265
300T10C3X-508110	1105	6"	265
300T10C3X-510110	1105	6"	265
300T10C4Z-508150	1290	6"	265
300T10C4Z-510150	1290	6"	265
300T10C4X-508150	1290	6"	265
300T10C4X-510150	1290	6"	265
300T10C5Z-510185	1475	6"	265
300T10C5X-510185	1475	6"	265

Note: 1* Diameter (ØMax) includes cable guard.
2* Discharge is threaded, 11 TPI, BSPP.

FPS-10300T Performance Curve

50 Hz
2900 RPM

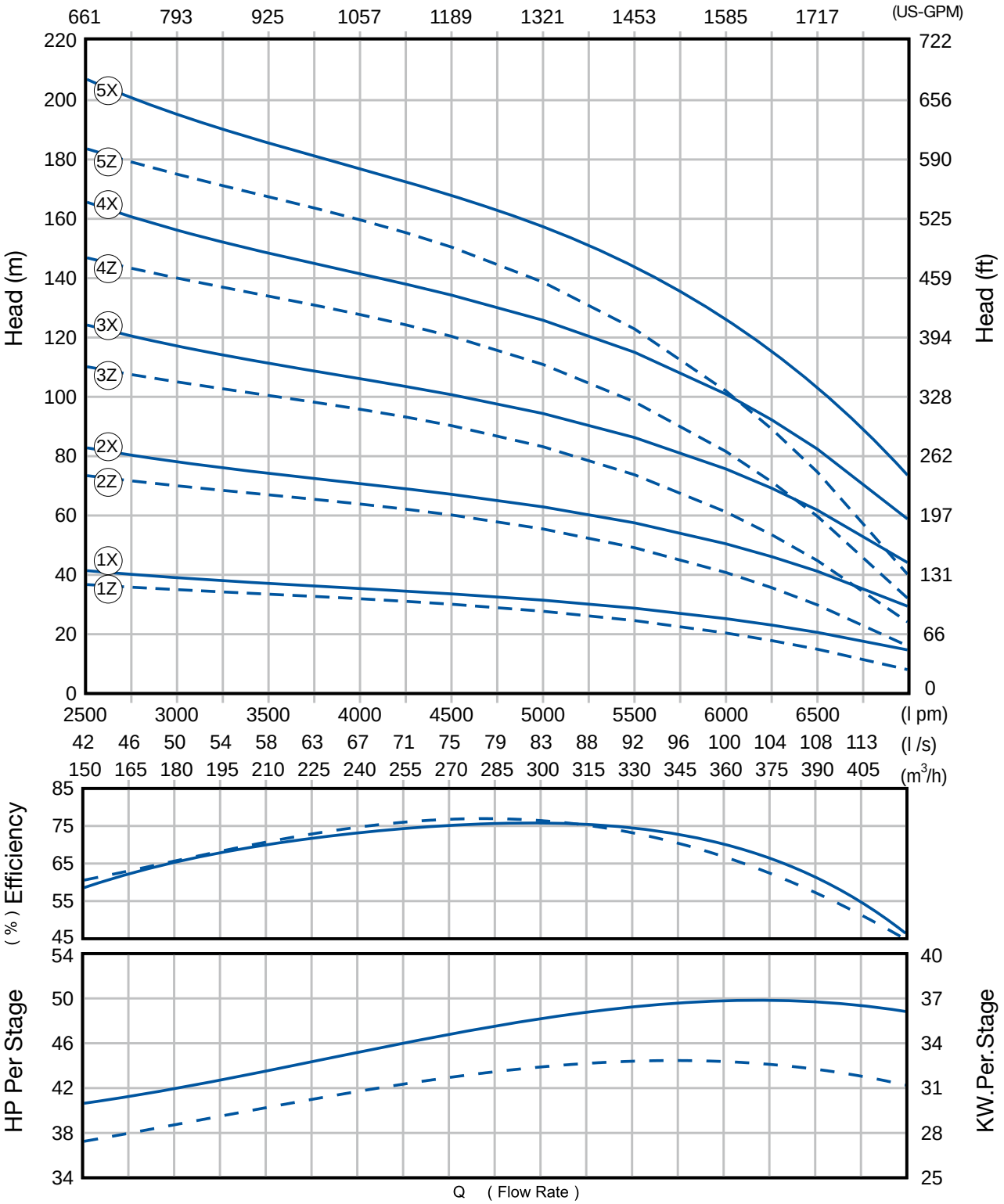

1* Tolerance of curves according to EN 9906 Appendix A

2* The hydraulic working characteristics have been calculated with water at 15°C at the atmospherical pressure of 1 bar

3* Performance curves are based on the kinematic viscosity ν = 1mm^2/s and density ρ = 1000 kg / m^3

FPS T series

AUSTRALIA / NEW ZEALAND
Franklin Electric (Australia) Pty. Ltd.
106 - 110 Micro Circuit
Dandenong South, Victoria 3175
Australia

Phone: +61.3.9799.5000
Fax: +61.3.9799.5050

UNITED STATES
9255 Coverdale Road
Fort Wayne, IN 46809
USA

Phone: +1.260.824.2900
Fax: +1.260.824.2909

System Solutions

Franklin Electric
www.franklinwater.com/au

FE983 11/13